SANITARY PRESSURE SUSTAINING VALVES
PS161

DESCRIPTION

The ADCAPure PS161 is a series of angle design direct acting diaphragm sensing pressure sustaining valves.
These regulators, available with spring or dome-loading, are designed for use with clean steam, compressed air, water and other gases or liquids compatible with the construction materials and valve design.



MAIN FEATURES

Spring or dome-loading.
Non-rising adjustment knob.
Compact design with clamped body.
Available with low pressure diaphragm.
FDA / USP Class VI compliant seals.
Completely machined from bar stock material, no castings or forgings are used.

STANDARD SURFACE FINISH

Internal wetted parts: ≤ 0,51 µm Ra – SF1.
External: ≤ 0,76 µm Ra – SF3.
Other surface conditions see TIS.GIA – General information ADCAPure.
Ultrasonic cleaning.

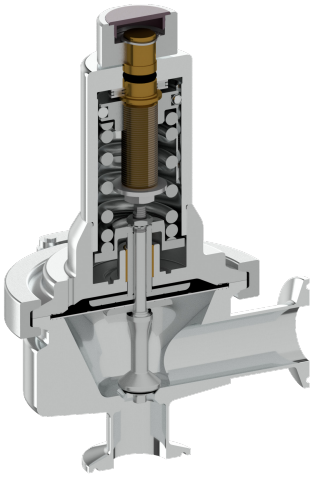

OPTIONS:	Leakage line connection. Dome-loading. Top cap (adjustment screw with cover). Gauge connection on body. Different soft sealings for liquids and gases. Degreased for oxygen application.
USE:	Clean steam, compressed air, water and other gases and liquids compatible with the construction.
AVAILABLE MODELS:	PS161.
SIZES:	1/2" to 2"; DN 15 to DN 50.
REGULATING RANGES:	0,8 to 1,5 bar; 1 to 3 bar; 1,5 to 8 bar.
CONNECTIONS:	ASME BPE, DIN and ISO clamp ferrules or tube weld (ETO) ends. Others on request.
PACKAGING:	Assembling and packaging in a clean room certified according to ISO 14644-1. The product is end capped and sealed with recyclable thermo-shrinkable plastic film, to avoid contamination.
INSTALLATION:	Horizontal installation. Horizontal inlet and vertical outlet. See IMI – Installation and maintenance instructions.

CE MARKING – GROUP 2 (PED – EUROPEAN DIRECTIVE)	
PN 10	**CATEGORY**
1/2" to 2" – DN 15 to 50	SEP

LIMITING CONDITIONS *	
Maximum allowable pressure	10 bar
Maximum upstream pressure	8 bar
Minimum upstream pressure	0,8 bar
Maximum operating temperature **	180 °C

* Other limits on request. Maximum operating conditions may be limited by the valve end connections due to normative restrictions.
** See "Ordering Codes" table for restrictions.

We reserve the right to change the design and material of this product without notice.

FLOW RATE COEFFICIENTS (m³/h)																
SIZE	ASME BPE					DIN						ISO				
	1/2"	3/4"	1"	11/2"	2"	DN 15	DN 20	DN 25	DN 32	DN 40	DN 50	DN 15	DN 20	DN 25	DN 32	DN 40
Kvs	1,3	3	4,2	7	13	2,1	3	4,2	4,2	7	13	2,1	4,2	4,2	7	7

OPTIONS

LEAKAGE LINE CONNECTION	DOME-LOADING	TOP CAP	GAUGE CONNECTION
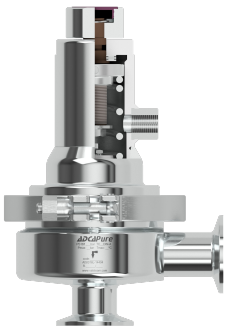	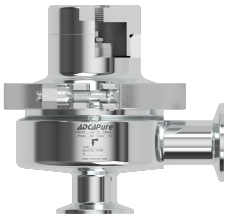		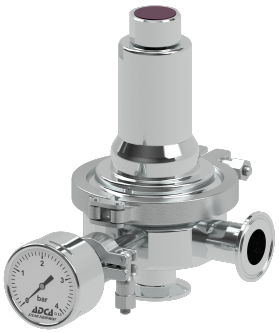

DIMENSIONS

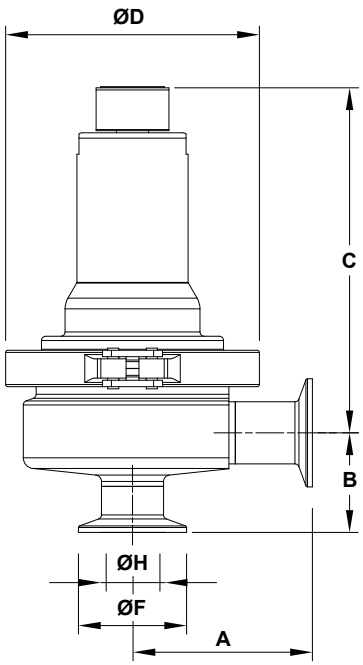

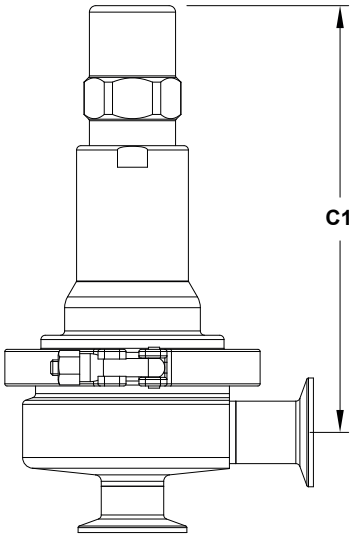

Optional top cap

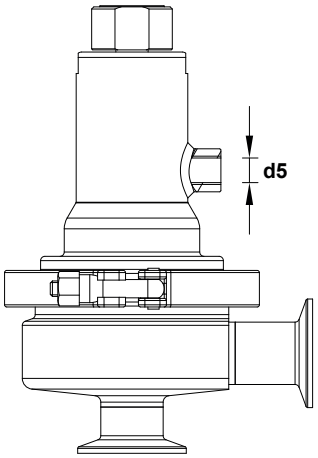

Optional leakage line connection

We reserve the right to change the design and material of this product without notice.

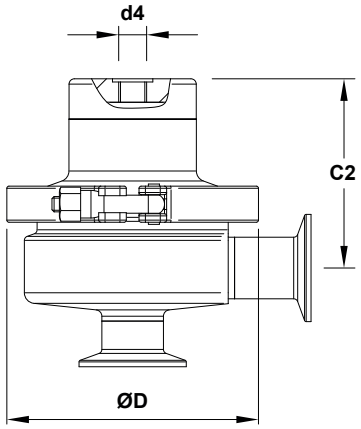

Optional dome-loading

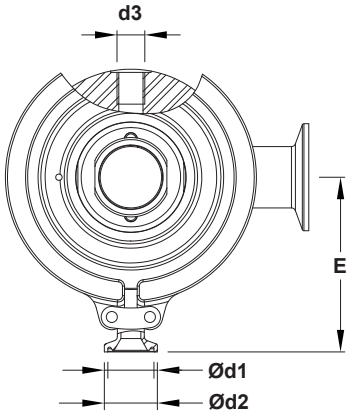

Optional gauge connection

DIMENSIONS – ASME BPE (mm)

SIZE	A	B	C	C1	C2	ØD	Ød1	Ød2	d3	d4	d5	E	ØF	ØH	WGT. (kg)
1/2"	77	53	156	203	84	119	25	15,75	1/4"	1/4"	1/4"	83	25	9,4	4,1
3/4"	77	56	160	207	88	119	25	15,75	1/4"	1/4"	1/4"	83	25	15,8	4,4
1"	77	52	163	210	91	119	25	15,75	1/4"	1/4"	1/4"	83	50,4	22,1	4,6
11/2"	85	61	204	257	124	134	25	15,75	1/4"	1/4"	1/4"	96	50,4	34,8	8
2"	85	67	207	254	127	134	25	15,75	1/4"	1/4"	1/4"	96	63,9	47,5	8,6

DIMENSIONS – DIN (mm)

SIZE	A	B	C	C1	C2	ØD	Ød1	Ød2	d3	d4	d5	E	ØF	ØH	WGT. (kg)
DN 15	77	45	160	207	88	119	25	15,75	1/4"	1/4"	1/4"	83	34	16	4,4
DN 20	77	40	158	205	86	119	25	15,75	1/4"	1/4"	1/4"	83	34	20	4,3
DN 25	84	47	161	208	89	119	25	15,75	1/4"	1/4"	1/4"	83	50,5	26	4,6
DN 32	84	50	163	210	91	119	25	15,75	1/4"	1/4"	1/4"	83	50,5	32	4,8
DN 40	93	69	202	249	122	134	25	15,75	1/4"	1/4"	1/4"	96	50,5	38	8
DN 50	93	75	206	253	126	134	25	15,75	1/4"	1/4"	1/4"	96	64	50	8,6

Remarks: Clamp ferrules according to DIN 32676-A. Tube weld (ETO) according to DIN 11866-A (DIN 11850-2).

DIMENSIONS – ISO (mm)

SIZE	A	B	C	C1	C2	ØD	Ød1	Ød2	d3	d4	d5	E	ØF	ØH	WGT. (kg)
DN 15	84	43	159	206	87	119	25	15,75	1/4"	1/4"	1/4"	83	50,5	18,1	4,4
DN 20	84	46	162	209	90	119	25	15,75	1/4"	1/4"	1/4"	83	50,5	23,7	4,6
DN 25	84	49	164	211	92	119	25	15,75	1/4"	1/4"	1/4"	83	50,5	29,7	4,8
DN 32	93	70	202	249	122	134	25	15,75	1/4"	1/4"	1/4"	96	64	38,4	8,2
DN 40	93	75	206	253	126	134	25	15,75	1/4"	1/4"	1/4"	96	64	44,3	8,8

Remarks: Clamp ferrules according to DIN 32676-B. Tube weld (ETO) according to DIN 11866-B (ISO 1127).

We reserve the right to change the design and material of this product without notice.

MATERIALS

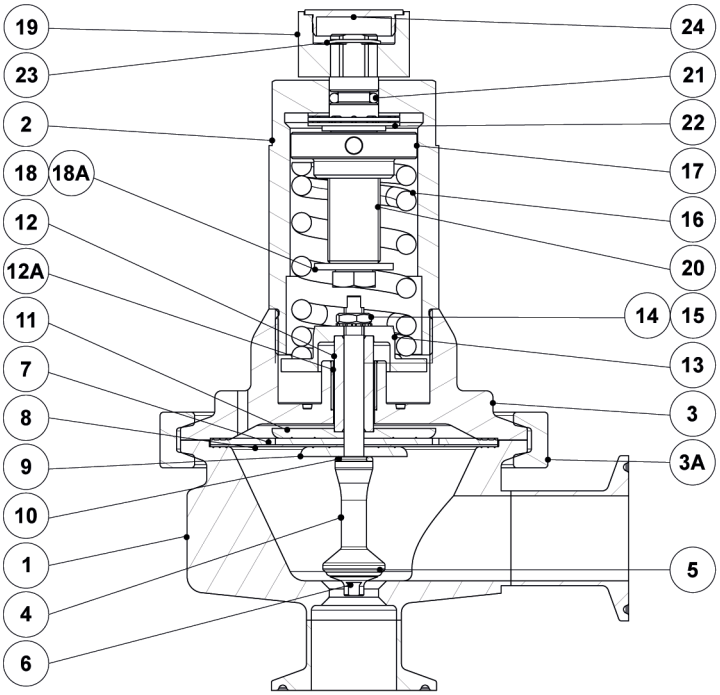

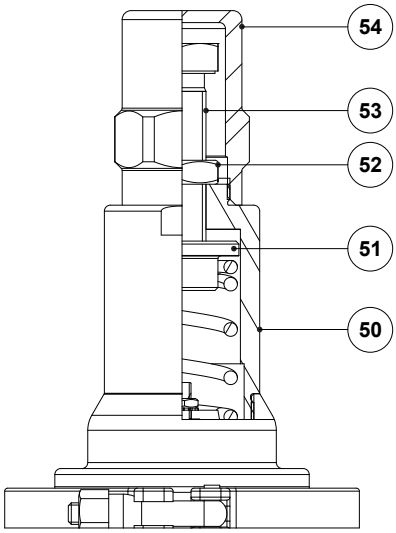

Optional top cap

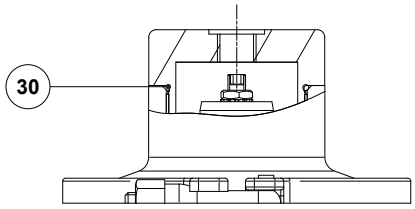

Optional dome-loading

We reserve the right to change the design and material of this product without notice.

MATERIALS		
POS. No.	**DESIGNATION**	**MATERIAL**
1	Valve body	AISI 316L / 1.4404
2	Cover	AISI 316L / 1.4404
3	Intermediate flange	AISI 316L / 1.4404
3A	Clamp	AISI 316 / 1.4401
4	* Valve stem	AISI 316L / 1.4404
5	* Valve seal	** EPDM; PTFE; FPM
6	* Valve plug	AISI 316L / 1.4404
7	* Upper diaphragm	EPDM
8	* Lower diaphragm	PTFE (Gylon)
9	Lower diaphragm plate	AISI 316L / 1.4404
10	* O-ring	** EPDM; PTFE; FPM
11	Upper diaphragm plate	AISI 316L / 1.4404
12	Stem guide	AISI 316L / 1.4404
12A	Plain bearing	Bronze
13	Spring plate	AISI 316L / 1.4404
14	Nut	Stainless steel A2-70
15	* Washer	Stainless steel A2
16	* Adjustment spring	AISI 302 / 1.4300
17	Top spring plate	AISI 316L / 1.4404
18	Washer	Stainless steel A2
18A	Bolt	Stainless steel A2-70
19	Adjustment knob	AISI 316L / 1.4404
20	Adjustment screw	Brass
21	O-ring	NBR
22	Bearing	Corrosion resistant steel
23	Shaft ring	Stainless steel
24	Cover nut	Plastic
30	* O-ring	EPDM
50	Cover	AISI 316L / 1.4404
51	Spring guide	Brass
52	Lock nut	Stainless steel A2-70
53	Adjustment screw	Stainless steel A2-70
54	Top cap	AISI 316L / 1.4404

* Available spare parts. ** Others on request.
Remarks: FDA / USP Class VI seals certificate on request.
All valves have a serial number. In case of non-standard valves, this number must be supplied if spare parts are ordered.

We reserve the right to change the design and material of this product without notice.

LRQA CERTIFIED ISO 9001

ADCAPure

ORDERING CODES PS161

VALVE MODEL	PS16	1	4	1	T	M	I	X	X	X	DI	15	
PS161 – AISI 316L / 1.4404 diaphragm sensing pressure sustaining valve	**PS16**												
VALVE SERIES													
Series 1		**1**											
REGULATING RANGE													
0,8 to 1,5 bar			**4**										
1 to 3 bar			**5**										
1,5 to 8 bar			**6**										
0,8 to 8 bar (dome-loading) **(a)**			**A**										
FLOW RATE COEFFICIENT													
Kvs 1,3 (only applicable to ASME BPE 1/2" size)				**1**									
Kvs 2,1 (applicable to sizes DIN DN 15 and ISO DN 15)				**2**									
Kvs 3 (applicable to sizes ASME BPE 3/4" and DIN DN 20)				**3**									
Kvs 4,2 (applicable to sizes ASME BPE 1", DIN DN 25 to DN 32 and ISO DN 20 to DN 25)				**4**									
Kvs 7 (applicable to sizes ASME BPE 11/2", DIN DN 40 and ISO DN 32 to DN 40)				**6**									
Kvs 13 (applicable to sizes ASME BPE 2" and DIN DN 50)				**8**									
DIAPHRAGM													
PTFE (Gylon)					**T**								
EPDM (non-standard) – Tmax 150 ºC					**E**								
VALVE SEALING (b)													
Metal to metal (non-standard, except in ASME BPE 1/2" size)						**M**							
EPDM – Tmax 150 ºC (180 ºC with steam and hot water)						**E**							
PTFE						**T**							
FPM (USP Class VI on request)						**V**							
ADJUSTMENT KNOB, TOP CAP AND LEAKAGE LINE CONNECTION													
Stainless steel adjustment knob							**I**						
Top cap (adjustment screw with cover)							**T**						
Stainless steel adjustment knob w/ ISO 228 G 1/4" leakage line connection							**L**						
Stainless steel adjustment knob w/ 1/4" NPT leakage line connection							**M**						
Top cap (adjustment screw with cover) w/ ISO 228 G 1/4" leakage line connection							**U**						
Top cap (adjustment screw with cover) w/ 1/4" NPT leakage line connection							**V**						
Dome-loading – ISO 228 G 1/4" **(c)**							**X**						
Dome-loading – 1/4" NPT **(c)**							**C**						
GAUGE CONNECTIONS													
Without gauge connections								**X**					
Tri-clamp gauge connection on the left side (relative to flow direction) – downstream pressure								**7**					
Tri-clamp gauge connection on the right side (relative to flow direction) – downstream pressure								**6**					
Tri-clamp gauge connections on both sides – downstream pressure								**5**					
Threaded gauge connection on the left side (relative to flow direction) – downstream pressure – ISO 228 G 1/4"								**4**					
Threaded gauge connection on the right side (relative to flow direction) – downstream pressure – ISO 228 G 1/4"								**3**					
Threaded gauge connections on both sides – downstream pressure – ISO 228 G 1/4"								**2**					
Threaded gauge connection on the left side (relative to flow direction) – downstream pressure – 1/4" NPT								**W**					
Threaded gauge connection on the right side (relative to flow direction) – downstream pressure – 1/4" NPT								**Y**					
Threaded gauge connections on both sides – downstream pressure – 1/4" NPT								**Z**					
SURFACE FINISH (d)													
Standard surface finish									**X**				
Mirror mechanical polished external surfaces (SF1)									**P**				
Electropolished internal wetted parts (SF5)									**E**				
SPECIAL FEATURES													
None										**X**			
Degreased for oxygen										**O**			
PIPE CONNECTIONS													
Clamp ferrule ASME BPE											**D**		
Clamp ferrule DIN (DIN 32676-A)											**F**		
Clamp ferrule ISO (DIN 32676-B)											**E**		
Tube weld (ETO) according to ASME BPE											**DI**		
Tube weld (ETO) according to DIN 11866-A (DIN 11850-2)											**FI**		
Tube weld (ETO) according to DIN 11866-B (ISO 1127)											**EI**		
SIZE													
1/2" or DN 15												**15**	
3/4" or DN 20												**20**	
1" or DN 25												**25**	
DN 32												**32**	
11/2" or DN 40												**40**	
2" or DN 50												**50**	
SPECIAL CONSTRUCTION / ADDITIONAL OPTIONS													
Full description or additional codes have to be added in case of a non-standard combination													**E**

(a) The loading control pressure can be up to a maximum of 0,2 bar above the required upstream pressure. **(b)** ASME BPE 1/2" size is only available with metal to metal sealing. **(c)** Mandatory in case of dome-loading. **(d)** Consult TIS.GIA – General information ADCAPure – for further details and other surface finish options.

We reserve the right to change the design and material of this product without notice.