TANK BLANKETING REGULATORS
BKRi2
(Low pressure reducing valve)

DESCRIPTION

Tank blanketing valves are commonly used in tank storage systems to prevent and protect against explosions (avoiding flammable liquids being vented from the vessel), to control product contamination against external air that may fill the vapour space, to reduce evaporation losses (consequently, production losses), to reduce internal corrosion (caused by air and moisture) and to prevent vacuum condition.
The blanketing process consists in covering the stored medium, usually a liquid, with a gas (normally N2).

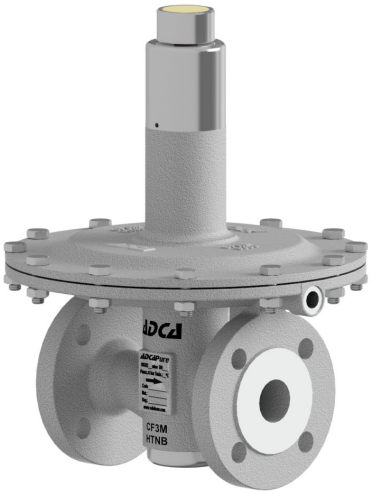

MAIN FEATURES

Compact design.
Non-rising adjustment knob.
FDA / USP Class VI compliant seals.

STANDARD SURFACE FINISH

Internal movable parts and machined surfaces: ≤ 0,76 µm Ra – SF3.
Other surfaces: as casted.
Ultrasonic cleaning.

OPTIONS:
Leakage line connection.
Dome-loading.
Top cap (adjustment screw with cover).
Gauge connection on body.
External sensing line connection (recommended for low set pressures < 10 mbar or high flow).
Blanketing with vacuum.
ATEX Ex version.

USE:
Air, nitrogen, argon and other gases compatible with the construction.

AVAILABLE MODELS:
BKRi2 – low pressure reducing valve.

SIZES:
1/2" and 1"; DN 15 and DN 25.

REGULATING RANGES:
5 to 10 mbar; 10 to 50 mbar; 20 to 200 mbar; 50 to 500 mbar; 5 to 4000 mbar (dome-loading).

CONNECTIONS:
Flanged EN 1092-1 PN 16.
Flanged ASME B16.5 Class 150.

INSTALLATION:
Vertical installation recommended, to allow drainage, or horizontal as close to the process as possible in order to prevent long pipe sections and flow restrictions.
See IMI – Installation and maintenance instructions.

CE MARKING – GROUP 2 (PED – EUROPEAN DIRECTIVE)	
PN 16	**CATEGORY**
1/2" and 1" – DN 15 and 25	SEP

CE MARKING – ATEX VERSION (ATEX – EUROPEAN DIRECTIVE)	
PN 16	**CATEGORY**
1/2" and 1" – DN 15 and 25	Ex h IIB T6...T3 Gb

LIMITING CONDITIONS *		
Maximum allowable pressure		16 bar
Maximum upstream pressure	Seat Ø5 mm	12 bar
	Seat Ø8 mm	6 bar
Maximum downstream pressure **		500 mbar
Minimum downstream pressure		5 mbar
Maximum operating temperature		130 °C

* Other limits on request. Maximum operating conditions may be limited by the valve end connections due to normative restrictions.
** 4000 mbar with dome-loading.

We reserve the right to change the design and material of this product without notice.

AIR CAPACITIES (Nm³/h) MAXIMUM INLET PRESSURE 6 bar – SEAT Ø8 mm										
SIZE	OUTLET PRESSURE (mbar) *	INLET PRESSURE (barg)								
		0,1	0,5	0,8	1	2	3	4	5	6
1/2" – DN 15	5 to 10	3,5	18	28	37	56	77	92	111	128
	10 to 50	3,5	18	28	37	56	77	92	111	128
	20 to 200	–	18	28	37	56	77	92	111	128
	50 to 500	–	–	–	37	56	77	92	111	128
1" – DN 25	5 to 10	4	20	32	40	63	85	102	125	140
	10 to 50	4	20	32	40	63	85	102	125	140
	20 to 200	–	20	32	40	63	85	102	125	140
	50 to 500	–	–	–	40	63	85	102	125	140

* Outlet pressure should not be more than 50% of the inlet, in order to reach the mentioned flow rates.

AIR CAPACITIES (Nm³/h) MAXIMUM INLET PRESSURE 12 bar – SEAT Ø5 mm						
SIZE	OUTLET PRESSURE (mbar) *	INLET PRESSURE (barg)				
		2	4	6	8	12
1/2" – DN 15	5 to 10	18	32	43	54	81
	10 to 50	18	32	43	54	81
	20 to 200	18	32	43	54	81
	50 to 500	18	32	43	54	81
1" – DN 25	5 to 10	21	35	49	62	90
	10 to 50	21	35	49	62	90
	20 to 200	21	35	49	62	90
	50 to 500	21	35	49	62	90

* Outlet pressure should not be more than 50% of the inlet, in order to reach the mentioned flow rates.

OPTIONS

LEAKAGE LINE CONNECTION	DOME-LOADING	TOP CAP
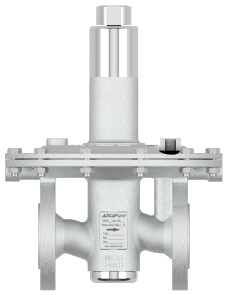	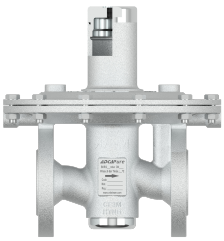	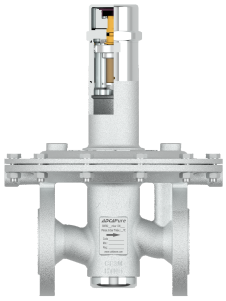
GAUGE CONNECTION	**EXTERNAL SENSING LINE CONNECTION**	**ATEX COMPLIANT**
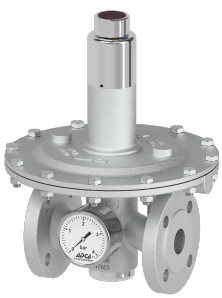	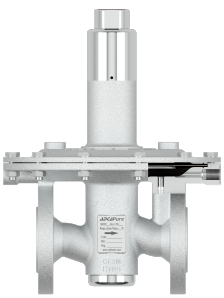	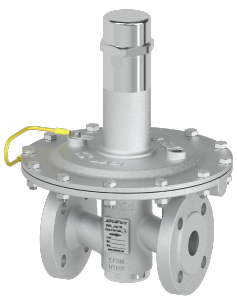

We reserve the right to change the design and material of this product without notice.

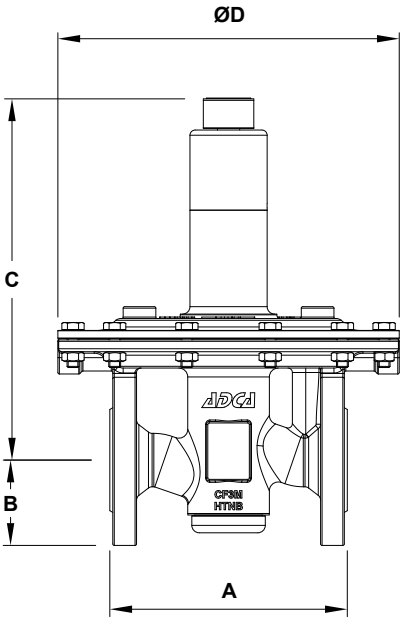

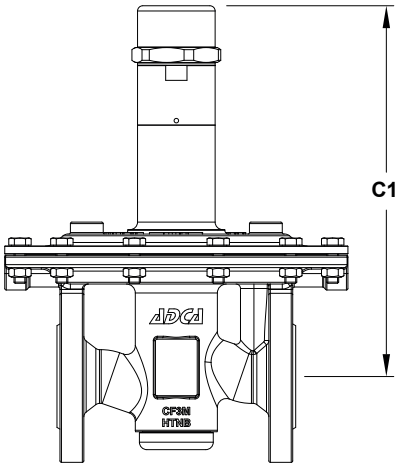

Optional top cap

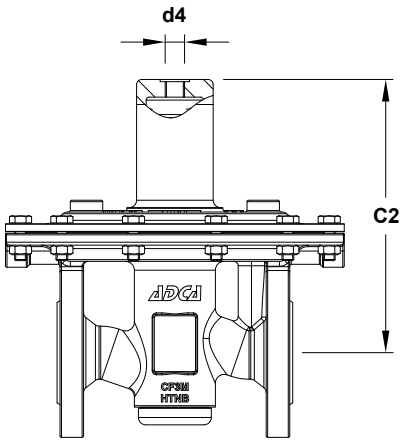

Optional dome-loading

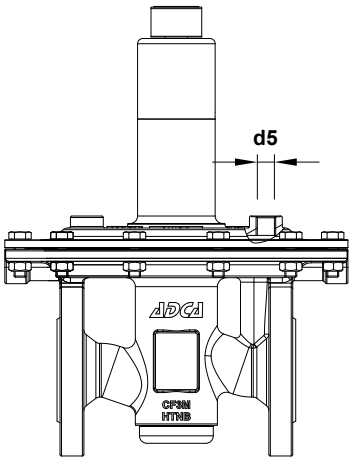

Optional leakage line connection

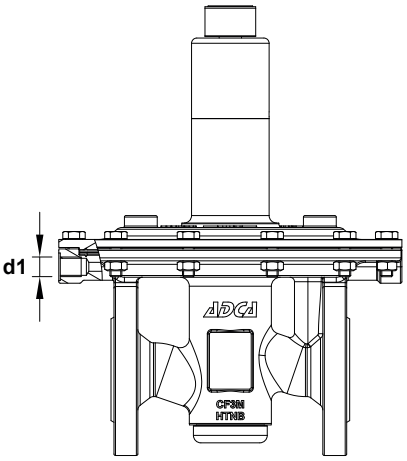

Optional external sensing line connection

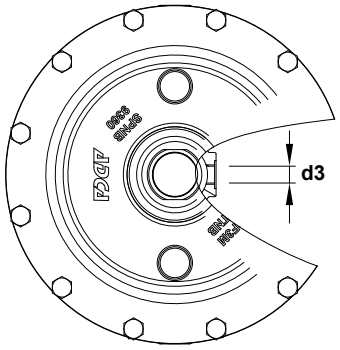

Optional gauge connection

DIMENSIONS (mm)											
SIZE	**A**	**B**	**C**	**C1**	**C2**	**ØD**	**d1**	**d3**	**d4**	**d5**	**WEIGHT (kg)**
1/2" – DN 15	130	47,5	243,5	249	186	230	1/4"	1/4"	1/4"	1/4"	9,7
1" – DN 25	160	57,5	243,5	249	186	230	1/4"	1/4"	1/4"	1/4"	10,8

We reserve the right to change the design and material of this product without notice.

MATERIALS

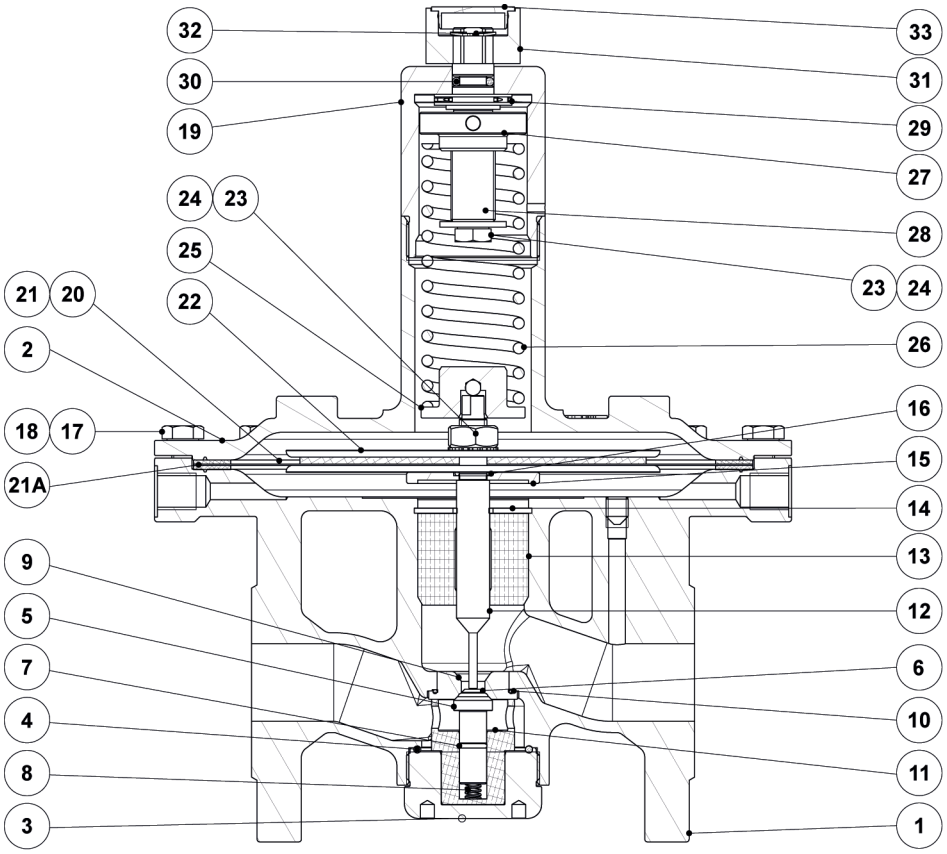

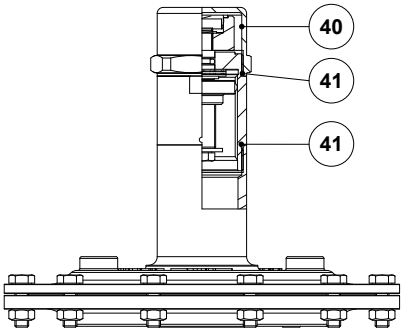

Optional top cap

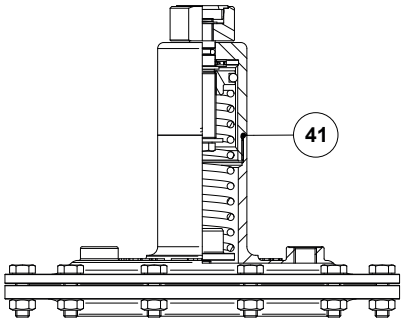

Optional leakage line connection

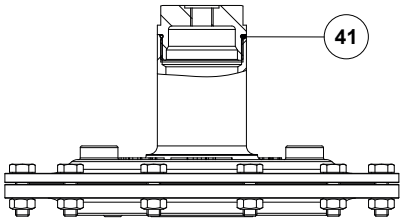

Optional dome-loading

We reserve the right to change the design and material of this product without notice.

MATERIALS		
POS. No.	**DESIGNATION**	**MATERIAL**
1	Valve body	A351 CF3M / 1.4409
2	Cover	A351 CF3M / 1.4409
3	Bottom cover	AISI 316L / 1.4404
4	* O-ring	** EPDM
5	* Piston	AISI 316L / 1.4404
6	* Valve seal	** EPDM; FPM
7	* O-ring	** EPDM; FPM
8	* Valve Spring	AISI 316 / 1.4401 electropolished
9	* Seat	AISI 316L / 1.4404
10	* O-ring	** EPDM
11	* Guide	** PTFE
12	Stem	AISI 316L / 1.4404
13	Stem guide	** PTFE
14	Retaining ring	Stainless steel A2
15	Diaphragm support plate	AISI 316L / 1.4404
16	* O-ring	** EPDM
17	Bolt	Stainless steel A2-70
18	Nut	Stainless steel A2-70
19	Spring cover	AISI 316L / 1.4404
20	* Lower diaphragm	PTFE (Gylon)
21	* Upper diaphragm	EPDM
21A	* Gasket	** EPDM
22	Diaphragm plate	AISI 316L / 1.4404
23	Nut	Stainless steel A2-70
24	Washer	Stainless steel A2
25	Lower spring guide	AISI 316L / 1.4404
26	* Adjustment spring	AISI 302 / 1.4300
27	Upper spring guide	AISI 316L / 1.4404
28	Adjustment screw	Brass
29	Bearing	Corrosion resistant steel
30	* O-ring	NBR
31	Adjustment knob	AISI 316L / 1.4404
32	Shaft ring	Stainless steel
33	Cover nut	Plastic
40	Top cap	AISI 316L / 1.4404
41	* O-ring	NBR

* Available spare parts; ** Others on request.
FDA / USP Class VI seals certificate on request.
All valves have a serial number. In case of non standard valves, this number must be supplied if spare parts are ordered.

TYPICAL INSTALLATION

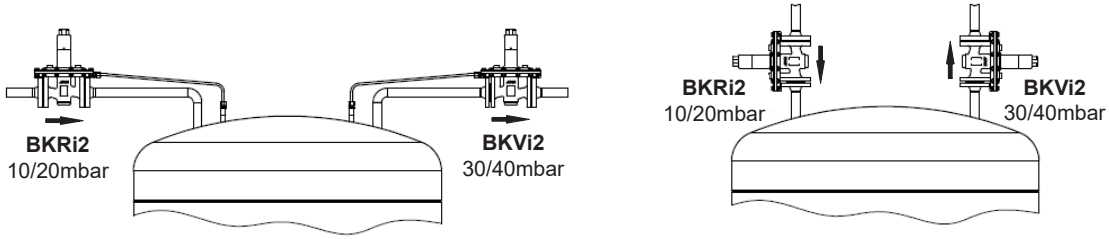

Blanketing with overpressure

We reserve the right to change the design and material of this product without notice.

ORDERING CODES BKRi2

VALVE MODEL	BRI	A	5	T	E	I	X	X	X	0	L	15	
BKRi2 – A351 CF3M / 1.4409 blanketing low pressure regulator	BRI												
REGULATING RANGE													
5 to 10 mbar		0											
10 to 50 mbar		1											
20 to 200 mbar		2											
50 to 500 mbar		3											
5 to 4000 mbar (dome-loading)		A											
VALVE SEAT ORIFICE													
Seat diameter 5 mm			5										
Seat diameter 8 mm			8										
DIAPHRAGM													
PTFE (Gylon)				T									
VALVE SEALING													
EPDM					E								
FPM (USP Class VI on request)					V								
ADJUSTMENT KNOB, TOP CAP AND LEAKAGE LINE CONNECTION													
Stainless steel adjustment knob						I							
Top cap (adjustment screw with cover)						T							
Stainless steel adjustment knob w/ ISO 228 G 1/4" leakage line connection						L							
Stainless steel adjustment knob w/ 1/4" NPT leakage line connection						M							
Top cap (adjustment screw with cover) w/ ISO 228 G 1/4" leakage line connection **(a)**						U							
Top cap (adjustment screw with cover) w/ 1/4" NPT leakage line connection **(a)**						V							
Dome-loading – ISO 228 G 1/4" **(b)**						X							
Dome-loading – 1/4" NPT **(b)**						C							
GAUGE CONNECTIONS													
Without gauge connections							X						
Threaded gauge connection on the left side (relative to flow direction) – downstream pressure – ISO 228 G 1/4"							4						
Threaded gauge connection on the right side (relative to flow direction) – downstream pressure – ISO 228 G 1/4"							3						
Threaded gauge connection on both sides – downstream pressure – ISO 228 G 1/4"							2						
Threaded gauge connection on the left side (relative to flow direction) – downstream pressure – 1/4" NPT							W						
Threaded gauge connection on the right side (relative to flow direction) – downstream pressure – 1/4" NPT							Y						
Threaded gauge connection on both sides – downstream pressure – 1/4" NPT							Z						
SURFACE FINISH (c)													
Standard surface finish								X					
Mirror mechanical polished external surfaces (SF1)								P					
Electropolished internal wetted parts (SF5)								E					
SPECIAL FEATURES													
None									X				
EXTERNAL SENSING LINE CONNECTIONS													
Internal sensing line (standard)										0			
External sensing line connection – ISO 228 G 1/4"										1			
External sensing line connection – 1/4" NPT										2			
PIPE CONNECTIONS													
Flanged EN 1092-1 PN 16											L		
Flanged ASME B16.5 Class 150											U		
SIZE													
1/2" or DN 15												15	
1" or DN 25												25	
SPECIAL CONSTRUCTION / ADDITIONAL OPTIONS													
ATEX compliant version													EX
Full description or additional codes have to be added in case of non-standard combination													E

(a) Mandatory in case of ATEX compliant version.
(b) Mandatory in case of dome-loading.
(c) Consult TIS.GIA – General information ADCAPure – for further details and other surface finish options.

We reserve the right to change the design and material of this product without notice.