FLOAT AND THERMOSTATIC STEAM TRAPS
FLT312 and FLT314

DESCRIPTION

The ADCA FLT312 and FLT314 are a series of high capacity float and thermostatic steam traps with integral air vent, designed for modulating discharge of condensate to ensure maximum system heat transfer. Specially designed for applications where continuous drainage is essential and high loads are involved.





MAIN FEATURES

High capacity.
Modulating discharge of condensate at steam temperature.
Unaffected by sudden or wide load and pressure variations.
No backing-up with condensate.
Excellent air discharge through its integrated thermostatic air vent.

OPTIONS: Stainless steel construction.
Equalizing (vent) and drain connections.
HVV – Hand vent valve.
BDV – Blowdown valve.
AFZ – Anti-freeze device.
VB21M – Vacuum breaker.

USE: Saturated and superheated steam.

AVAILABLE MODELS: FLT312S and FLT314S – carbon steel.

SIZES: FLT312S – 2"; DN 50.
FLT314S – 21/2"; DN 65.

CONNECTIONS: Flanged EN 1092-1 PN 16.
Flanged ASME B16.5 Class 150.

INSTALLATION: Horizontal installation.
See IMI – Installation and maintenance instructions.

CE MARKING – GROUP 2 (PED – EUROPEAN DIRECTIVE)	
PN 16	**CATEGORY**
2" and 21/2" DN 50 and 65	2 (CE marked)

BODY LIMITING CONDITIONS *	
FLANGED PN 16 / CLASS 150	**RELATED TEMPERATURE**
ALLOWABLE PRESSURE	
14,8 bar	100 ºC
13,3 bar	200 ºC
12,1 bar	250 ºC
11 bar	300 ºC

PMO – Maximum operating pressure: 12 bar.
TMO – Maximum operating temperature: 250 ºC.
Minimum operating temperature: -10 ºC.
* According to EN 1092-1:2018.

We reserve the right to change the design and material of this product without notice.

FLOW RATE CAPACITY (kg/h)																	
MODEL	SIZE	DIFFERENTIAL PRESSURE (bar)															
		0,1	0,3	0,5	1	1,5	2	2,5	3	3,5	4	5	6	7	8	10	12
FLT312S	2" – DN 50	7500	10000	11300	12500	13500	15000	16000	17500	18500	20000	20500	21500	22000	22500	23000	23500
FLT314S	21/2" – DN 65	18800	22700	24500	29000	31000	34000	37000	38000	39500	42000	43500	45500	47000	48000	49500	50000

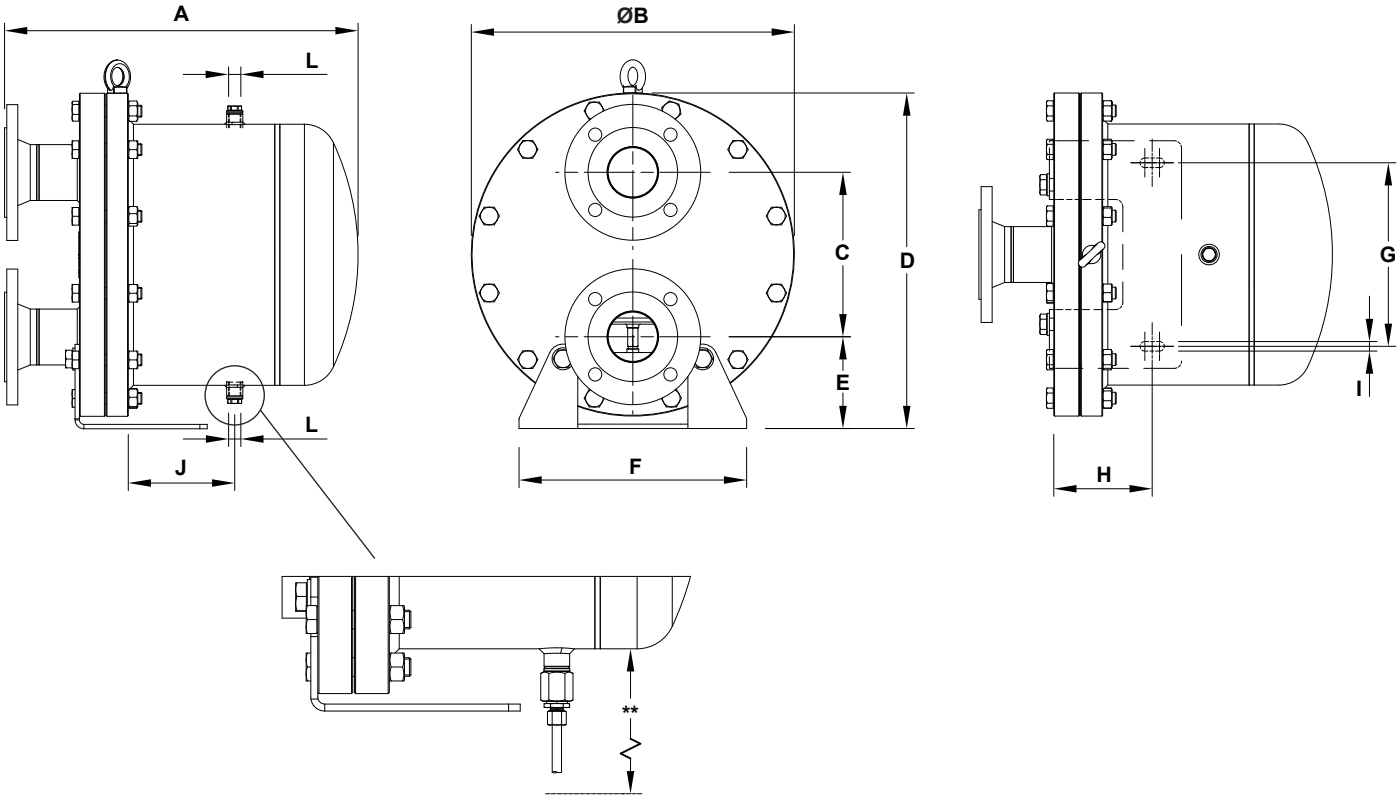

DIMENSIONS (mm)														
MODEL	SIZE	PN 16											CLASS 150	WEIGHT (kg)
		A	ØB	C	D	E	F	G	H	I	J	L *	A	
FLT312S	2" – DN 50	430	350	177	370	110	250	200	140	13	130	3/8"	446	57
FLT314S	21/2" – DN 65	482	440	224	457	125	310	250	134	13	145	3/8"	506	100

* As standard, in versions with EN flanges, this connection is female threaded ISO 228. In versions with ASME flanges, this connection is female threaded NPT.

** In case an optional accessory is to be installed on the drain connection ensure there is enough clearance below the unit. A higher supporting frame can be supplied on request.

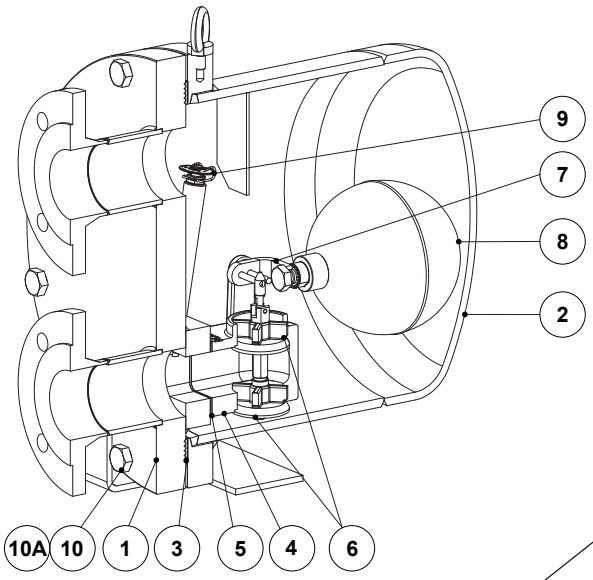

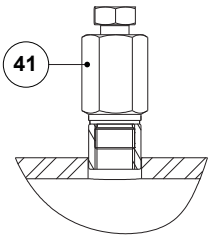

Optional hand vent valve (HVV)

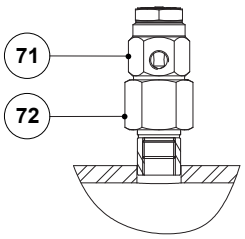

Optional vacuum breaker (VB21M)

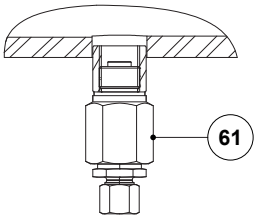

Optional anti-freeze device (AFZ); Automatic

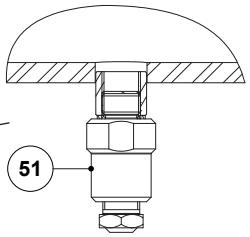

Optional blowdown valve (BDV); Manual

MATERIALS		
POS. No.	**DESIGNATION**	**MATERIAL**
1	Body	P250GH / 1.0460; P235GH / 1.0345; S355J2 / 1.0577; S235JR / 1.0038
2	Cover	P265GH / 1.0425; P235GH / 1.0345; S355J2 / 1.0577; S235JR / 1.0038
3	* Gasket	Stainless steel / Graphite
4	* Seat	CF8 / 1.4308
5	* Gasket	Stainless steel / Graphite
6	* Valve	CA-40 / 1.4027; AISI 410 / 1.4006
7	* Lever	AISI 316 / 1.4401; AISI 304 / 1.4301
8	* Float	AISI 304 / 1.4301
9	* Automatic air vent	Stainless steel (thermostatic)
10	Bolt	Steel 8.8
10A	Nut	Steel 8.8
41	Hand vent valve	AISI 303 / 1.4305; AISI 316L / 1.4404
51	Blowdown valve	AISI 303 / 1.4305; AISI 316L / 1.4404
61	Anti-freeze device	AISI 303 / 1.4305; AISI 316L / 1.4404
71	Vacuum breaker	AISI 303 / 1.4305
72	Adapter fitting	AISI 303 / 1.4305

* Available spare parts.

We reserve the right to change the design and material of this product without notice.