PNEUMATIC ON/OFF GLOBE VALVES
PV15
(ASME)

DESCRIPTION

The ADCATrol PV15 is a series of single seated, two-way pneumatic on/off globe valves with diaphragm actuator. These valves are suitable for use with the most common process fluids such as steam, water, superheated water, air, neutral gases and oils.



MAIN FEATURES

Easy to service.
Compact and cost-effective.
Class VI shut-off with PTFE/GR soft sealing up to 200 ºC.
Stem guided (up to 2") and post guided (from 21/2" to 4").
Compact actuators with rolling diaphragm.
High spring thrusts and stroking speeds.
Yoke and stem coupling with mounting according to NAMUR (DIN IEC 60534-6-1).
Ambient temperature from -10 to 80 ºC.



OPTIONS AND ACCESSORIES:	Top mounted handwheel. Filter regulators, solenoid valves and limit switches.
USE:	Saturated steam. Hot and superheated water. Air, gases and others.
AVAILABLE MODELS:	PV15S – carbon steel. PV15i – stainless steel.
SIZES:	1/2" to 6".
CONNECTIONS:	Flanged ASME B16.5 Class 150 or 300.

CE MARKING – GROUP 2 (PED – EUROPEAN DIRECTIVE)		
CLASS 150	**CLASS 300**	**CATEGORY**
1/2" to 2"	1/2" to 1"	SEP
21/2" to 6"	11/2" to 4"	1 (CE marked)
–	6"	2 (CE marked)

We reserve the right to change the design and material of this product without notice.

BODY LIMITING CONDITIONS *

PV15S				PV15i			
CLASS 150		CLASS 300		CLASS 150		CLASS 300	
ALLOW. PRESS.	RELAT. TEMP.	ALLOW. PRESS.	RELAT. TEMP.	ALLOW. PRESS.	RELAT. TEMP.	ALLOW. PRESS.	RELAT. TEMP.
19,3 bar	-10 / 50 ºC	50 bar	-10 / 50 ºC	18,4	-10 / 50 ºC	48,1	-10 / 50 ºC
15,8 bar	150 ºC	43,9 bar	200 ºC	14,4	200 ºC	35,8	200 ºC
12,1 bar	250 ºC	36,9 bar	350 ºC	12	350 ºC	30,4	350 ºC
8,4 bar	350 ºC	34,6 bar	400 ºC	8,4	400 ºC	29,3	400 ºC

* Rating according to EN 1759-1:2004.

BONNET DESIGN

STANDARD	EXTENDED
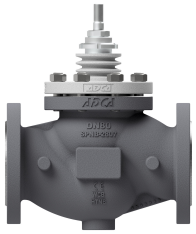	
-10 ºC to 250 ºC	Above 250 ºC

STEM SEALING

PTFE/GR V-RINGS (V1.2)	PTFE V-RINGS (V2.2)	EPDM (EP1)	GRAPHITE (G1)	BELLOWS	
				(BV1)	(BG1)
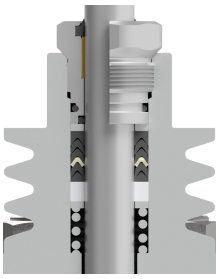	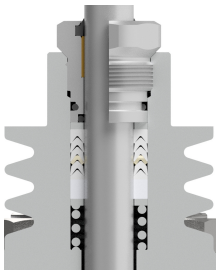	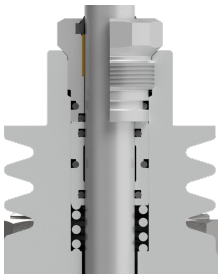	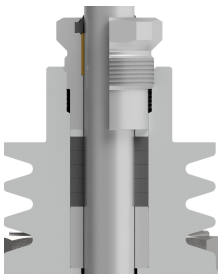	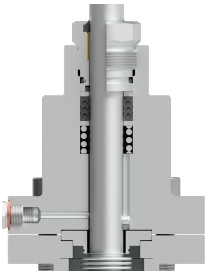	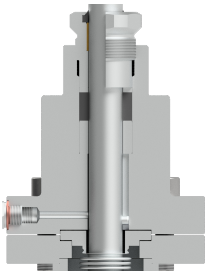
-10 to 220 ºC	-10 to 180 ºC	-10 to 150 ºC *	-10 to 400 ºC	- 60 to 220 ºC **	- 60 to 400 ºC **

* Up to 180 ºC in steam and hot water applications.
** Maximum operating pressure: 25 bar.

PLUG DESIGN

PARABOLIC	PARABOLIC (SOFT SEALING)
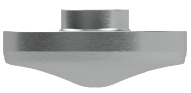	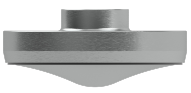
Sealing: Metal to metal **Characteristic:** Quick-opening (On/Off) **Flow direction:** From below **Leakage:** Class V, acc. to IEC 60534-4	**Sealing:** PTFE/GR **Characteristic:** Quick-opening (On/Off) **Flow direction:** From below **Leakage:** Class VI, acc. to IEC 60534-4 **Max. temp.:** 200 ºC

We reserve the right to change the design and material of this product without notice.

FLOW RATE COEFFICIENTS (m³/h)									
SIZES	**1/2"**	**3/4"**	**1"**	**11/2"**	**2"**	**21/2"**	**3"**	**4"**	**6"**
Kvs	5,1	6,3	10	25	40	63	100	160	370
SEAT Ø (mm)	19,2	19,2	25	38	48	65	76	96	150
STROKE (mm)	5	8	8	10	12,5	20	20	25	38

For conversion Kvs = Cv (US) x 0,865.

PV15 – PA SERIES ACTUATORS – FTO, UNBALANCED TRIM, SOFT SEALING (CLASS VI)

VALVE SIZE	ACTUATOR MODEL	MAX. PERMISSIBLE PRESSURE DROP (bar) *														MAX. AIR SUPPLY PRESSURE (bar)			
		AIR TO OPEN (STEM EXTENDS BY SPRING FORCE)		AIR TO CLOSE (STEM RETRACTS BY SPRING FORCE)												AIR TO OPEN (STEM EXTENDS BY SPRING FORCE)		AIR TO CLOSE (STEM RETRACTS BY SPRING FORCE)	
				AIR SUPPLY PRESSURE (bar)															
				1,4		2		3		4		5		6					
		PTFE	GRAPH.	PTFE	GRAPH.	PTFE	GRAPH.	PTFE	GRAPH.	PTFE	GRAPH.	PTFE	GRAPH.	PTFE	GRAPH.	MIN.	MAX.	MIN.	MAX.
1/2"	**PA10 (100cm²)**	50	50	19,9	16,4	36,5	33	50	50	50	50	50	50	50	50	4,2	6	1,4	6
3/4"	**PA10 (100cm²)**	50	50	16,6	13,1	33,2	29,7	50	50	50	50	50	50	50	50	4,2	6	1,4	6
1"	**PA10 (100cm²)**	50	50	9,7	7,6	19,5	17,4	35,8	33,7	50	50	50	50	50	50	4,2	6	1,4	6
11/2"	**PA10 (100cm²)**	20,5	19,6	3,6	2,7	7,8	6,9	14,8	13,9	21,9	21	28,9	28	36	35,1	4,2	6	1,4	6
	PA25 (250cm²)	50	50	9,9	9	20,5	19,6	38,1	37,2	50	50	-	-	-	-	4,2	6	1,4	4
2"	**PA10 (100cm²)**	11,7	11,1	1,7	1,2	4,4	3,8	8,8	8,3	13,2	12,7	17,7	17,1	22,1	21,5	4,2	6	1,4	6
	PA25 (250cm²)	29,9	29,4	5,1	4,5	11,7	11,1	22,7	22,2	33,8	33,2	44,8	44,3	50	50	4,2	6	1,4	6
	PA40 (400cm²)	50	50	-	-	-	-	-	-	-	-	-	-	-	-	4,2	6	-	-
21/2"	**PA25 (250cm²)**	11,8	11,5	0,9	0,6	4,5	4,2	10,6	10,2	16,6	16,3	22,6	22,3	28,6	28,3	4,2	6	1,4	6
	PA40 (400cm²)	28,6	28,3	4,1	3,8	9,9	9,6	19,6	19,3	29,2	28,9	-	-	-	-	4,5	6	1,4	4
21/2" M16x1,5	**PA40 (400cm²)**	31,9	31,5	4,1	3,8	9,9	9,6	19,6	19,3	29,2	28,9	38,9	38,6	48,5	48,2	5	6	1,4	6
	PA80 (800cm²)	50	50	7,3	6,9	18,9	18,5	38,2	37,7	50	50	50	50	-	-	4,2	6	1,4	5
3"	**PA25 (250cm²)**	8,6	8,4	0,6	0,4	3,3	3,1	7,7	7,5	12,1	11,9	16,5	16,3	20,9	20,7	4,2	6	1,4	6
	PA40 (400cm²)	20,9	20,7	3	2,8	7,2	7	14,3	14,1	21,4	21,1	-	-	-	-	4,5	6	1,4	4
3" M16x1,5	**PA40 (400cm²)**	23,3	23	3	2,8	7,2	7	14,3	14,1	21,4	21,1	28,4	28,2	35,5	35,2	5	6	1,4	6
	PA80 (800cm²)	47	46,6	5,4	5	13,8	13,5	27,9	27,6	42	41,7	50	50	-	-	4,2	6	1,4	5
4"	**PA40 (400cm²)**	13,1	12,9	1,3	1,2	3,9	3,8	8,4	8,2	12,8	12,6	-	-	-	-	5	6	1,4	4
4" M16x1,5	**PA40 (400cm²)**	-	-	1,3	1,2	3,9	3,8	8,4	8,2	12,8	12,6	17,2	17,1	21,6	21,5	-	-	1,4	6
	PA80 (800cm²)	27,7	27,4	3,3	3,1	8,6	8,4	17,5	17,3	26,3	26,1	35,2	35	-	-	4,2	6	1,4	5
6"	**PA80 (800cm²)**	9,9	9,8	2,4	2,3	4,6	4,5	8,2	8,1	11,8	11,7	15,4	15,3	19,1	19	4,2	6	1,4	6
	PA80D (1600cm²)	18	17,9	-	-	-	-	-	-	-	-	-	-	-	-	4,2	6	-	-

* “PTFE” specified pressure drops are applicable in case of V-ring and O-ring stem seals independently of the material.
“GRAPH.” specified pressure drops are applicable in case of graphite and bellow stem seals.

We reserve the right to change the design and material of this product without notice.

PV15 – PA SERIES ACTUATORS – FTO, UNBALANCED TRIM, METAL SEALING (CLASS V)

VALVE SIZE	ACTUATOR MODEL	MAX. PERMISSIBLE PRESSURE DROP (bar) *														MAX. AIR SUPPLY PRESSURE (bar)			
		AIR TO OPEN (STEM EXTENDS BY SPRING FORCE)		AIR TO CLOSE (STEM RETRACTS BY SPRING FORCE)												AIR TO OPEN (STEM EXTENDS BY SPRING FORCE)		AIR TO CLOSE (STEM RETRACTS BY SPRING FORCE)	
				AIR SUPPLY PRESSURE (bar)															
				1,4		2		3		4		5		6					
		PTFE	GRAPH.	PTFE	GRAPH.	PTFE	GRAPH.	PTFE	GRAPH.	PTFE	GRAPH.	PTFE	GRAPH.	PTFE	GRAPH.	MIN.	MAX.	MIN.	MAX.
1/2"	PA10 (100cm²)	50	50	12,1	8,6	28,7	25,1	50	50	50	50	50	50	50	50	4,2	6	1,4	6
3/4"	PA10 (100cm²)	50	50	8,8	5,2	25,4	21,8	50	49,5	50	50	50	50	50	50	4,2	6	1,4	6
1"	PA10 (100cm²)	44,8	42,7	3,7	1,6	13,5	11,4	29,8	27,7	46,1	44	50	50	50	50	4,2	6	1,4	6
11/2"	PA10 (100cm²)	20,5	19,6	-	-	3,8	2,9	10,9	10	17,9	17	25	24,1	32	31,1	4,2	6	1,4	6
	PA25 (250cm²)	48,3	47,4	5,9	5	16,5	15,6	34,2	33,3	50	50	-	-	-	-	4,2	6	1,4	4
2"	PA10 (100cm²)	8,6	8	-	-	1,3	0,7	5,7	5,1	10,1	9,5	14,5	14	18,9	18,4	4,2	6	1,4	6
	PA25 (250cm²)	26,8	26,2	1,9	1,4	8,6	8	19,6	19	30,7	30,1	41,7	41,1	50	50	4,2	6	1,4	6
	PA40 (400cm²)	50	50	-	-	-	-	-	-	-	-	-	-	-	-				
21/2"	PA25 (250cm²)	9,4	9,1	-	-	2,2	1,9	8,2	7,9	14,3	14	20,3	20	26,3	26	4,2	6	1,4	6
	PA40 (400cm²)	26,3	26	1,8	1,5	7,6	7,3	17,3	16,9	26,9	26,6	-	-	-	-	4,5	6	1,4	4
21/2" M16x1,5	PA40 (400cm²)	29,6	29,2	1,8	1,5	7,6	7,3	17,3	16,9	26,9	26,6	36,5	36,2	46,2	45,9	5	6	1,4	6
	PA80 (800cm²)	50	50	5	4,6	16,6	16,1	35,9	35,4	50	50	50	50	-	-	4,2	6	1,4	5
3"	PA25 (250cm²)	6,6	6,4	-	-	1,3	1,1	5,7	5,5	10,1	9,9	14,5	14,3	19	18,7	4,2	6	1,4	6
	PA40 (400cm²)	19	18,7	1	0,8	5,3	5	12,3	12,1	19,4	19,1	-	-	-	-	4,5	6	1,4	4
3" M16x1,5	PA40 (400cm²)	21,4	21	1	0,8	5,3	5	12,3	12,1	19,4	19,1	26,4	26,2	33,5	33,3	5	6	1,4	6
	PA80 (800cm²)	45	44,7	3,4	3	11,8	11,5	26	25,6	40,1	39,7	54,2	53,8	-	-	4,2	6	1,4	5
4"	PA40 (400cm²)	11,5	11,3	-	-	2,4	2,2	6,8	6,7	11,2	11,1	-	-	-	-	5	6	1,4	4
4" M16x1,5	PA40 (400cm²)	-	-	-	-	2,4	2,2	6,8	6,7	11,2	11,1	15,6	15,5	20,1	19,9	-	-	1,4	6
	PA80 (800cm²)	26,1	25,9	1,8	1,6	7,1	6,9	15,9	15,7	24,8	24,5	33,6	33,4	-	-	4,2	6	1,4	5
6"	PA80 (800cm²)	8,9	8,8	1,4	1,3	3,6	3,5	7,2	7,1	10,8	10,7	14,4	14,3	18,1	18	4,2	6	1,4	6
	PA80D (1600cm²)	17	16,9	-	-	-	-	-	-	-	-	-	-	-	-	4,2	6	-	-

* “PTFE” specified pressure drops are applicable in case of V-ring and O-ring stem seals independently of the material.
“GRAPH.” specified pressure drops are applicable in case of graphite and bellow stem seals.

We reserve the right to change the design and material of this product without notice.

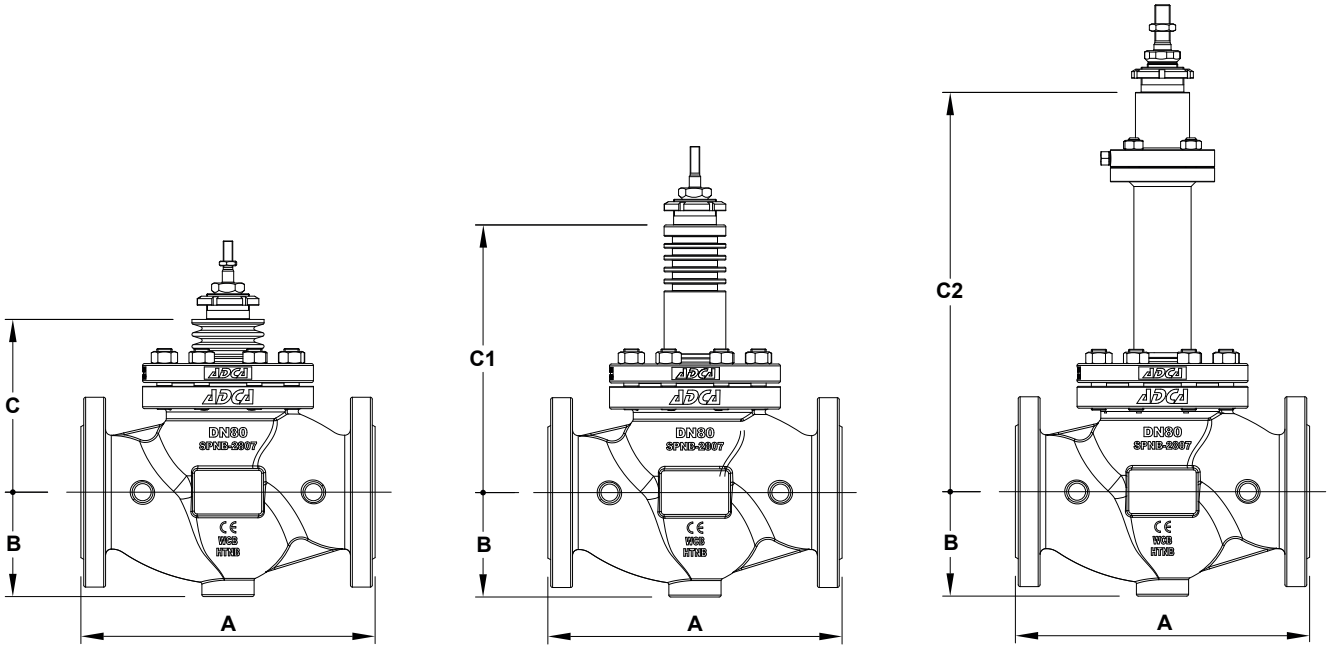

Valve with standard bonnet *Valve with extended bonnet* *Bellows sealed valve*

DIMENSIONS (mm)										
DIMENSION		SIZE								
		1/2"	3/4"	1"	11/2"	2"	21/2"	3"	4"	6"
A	CLASS 150	184 **(a)**	184 **(a)**	184	222	254	276	298	352	451
	CLASS 300	190 **(a)**	194 **(a)**	197	235	267	292	318	368	473
B	CLASS 150	44,5	49	54	65	85	100	110	130	182
	CLASS 300	47,5	58,5	62	78	85	100	110	130	182
C		85	85	90	115	125	176	175	190	216
C1		150	150	170	195	204	276	275	310	320
C2		314	314	322	317	317	415	442	451	590

(a) With welded-on flanges.
Remark: In the beginning of year 2022 new face to face dimensions have been defined for some Class 150 valves. Valves may still be supplied with the previous face to face dimensions under request. Consult the manufacturer.

WEIGHTS (kg)										
		SIZE								
		1/2"	3/4"	1"	11/2"	2"	21/2"	3"	4"	6"
STANDARD	CLASS 150	4,5	5	6,1	11,1	15,2	30,9	36,5	52,5	103,1
	CLASS 300	4,9	6	7,5	13,9	17,5	34	41,9	60,5	119,3
EXTENDED	CLASS 150	5,2	5,7	6,8	12,4	16,4	31,6	37	53,2	109,8
	CLASS 300	5,6	6,7	8,2	15,2	18,7	34,7	42,5	61,2	121,1
BELLOWS	CLASS 150	8,7	9,2	10,2	15,1	19	34,7	39,5	55,6	114,8
	CLASS 300	9,1	10,2	11,6	17,9	21,3	37,8	45,5	63,5	126,1

We reserve the right to change the design and material of this product without notice.

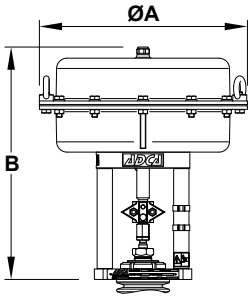

PA10, PA25, PA40 and PA80

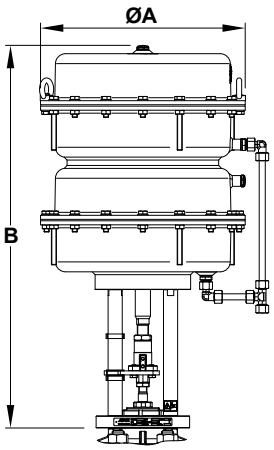

PA80D

DIMENSIONS – PA SERIES PNEUMATIC ACTUATORS (mm)					
DIMENSION	**PA10**	**PA25**	**PA40**	**PA80**	**PA80D**
ØA	170	250	300	405	405
B	267	269	334 **(a)** 369 **(b)**	521 **(b)** 530 **(c)**	757 **(c)**
WEIGHT (kg)	6,3	10,1	18,7	50,4 **(b)** 55,4 **(c)**	108 **(c)**

(a) 2" to 4"; **(b)** 21/2" to 4"; **c)** 6".

For more information, please consult IS PA.010 – PA Linear pneumatic actuators.

We reserve the right to change the design and material of this product without notice.

MATERIALS

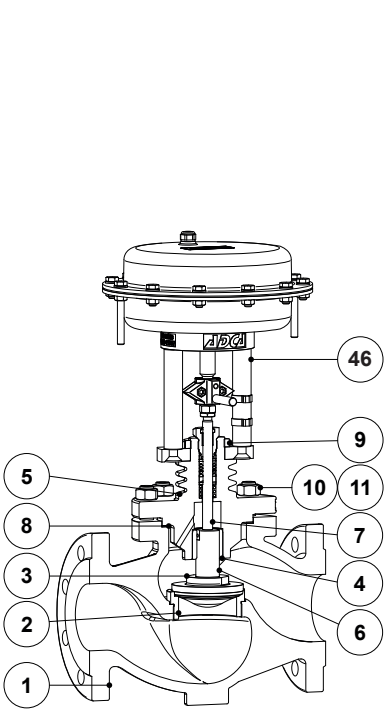

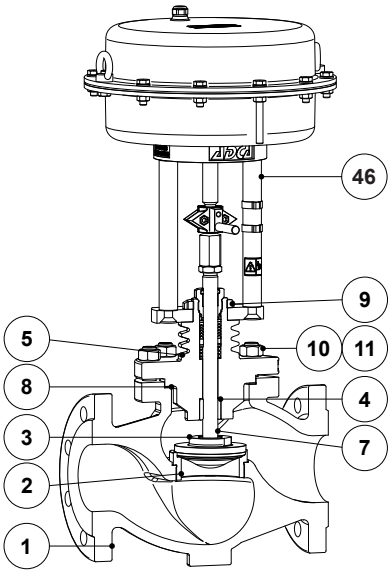

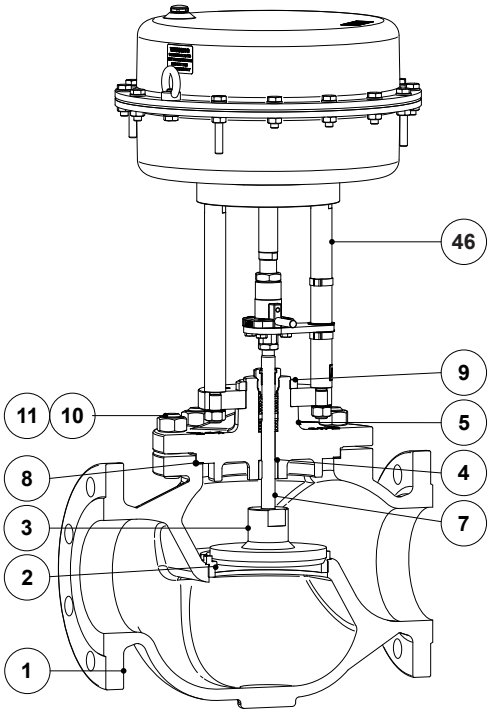

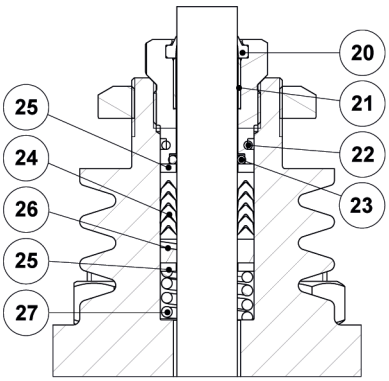

PTFE/GR V-Rings
(V1.2)

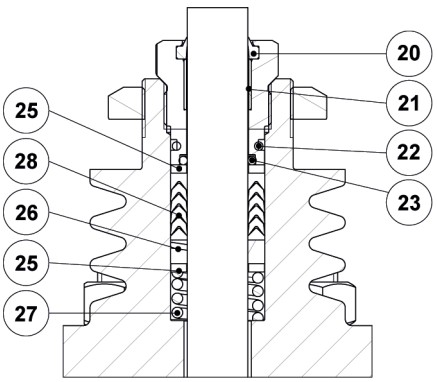

PTFE V-Rings
(V2.2)

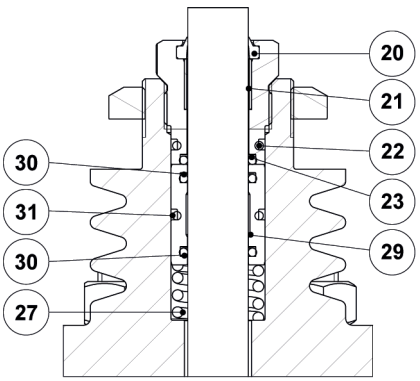

EPDM
(EP1)

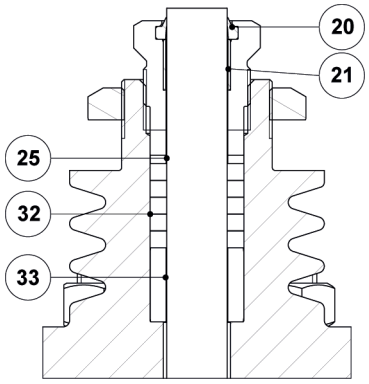

Graphite
(G1)

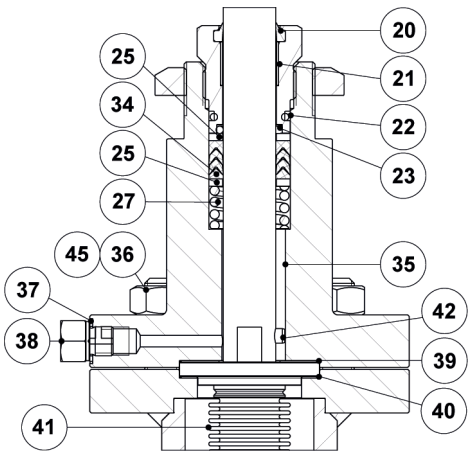

Bellows sealing
(BV1)

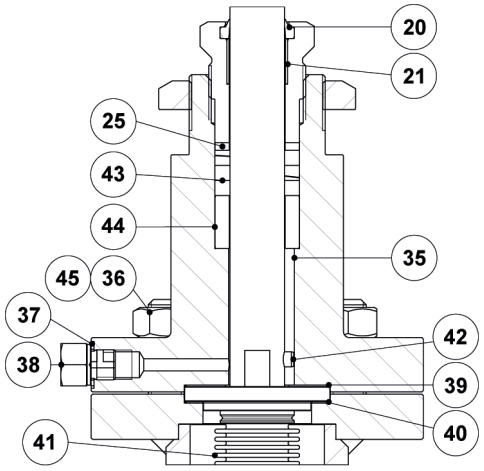

Bellows sealing
(BG1)

We reserve the right to change the design and material of this product without notice.

MATERIALS		
POS. No.	**DESIGNATION**	**MATERIAL**
1	Valve body (PV15S)	A216 WCB / 1.0619
	Valve body (PV15i)	A351 CF8M / 1.4408
2	* Seat	AISI 316L / 1.4404
3	* Valve plug	AISI 316L / 1.4404
4	Stem guide	Bronze CB1
5	Bonnet (PV15S)	A351 CF8M / 1.4408; A216 WCB / 1.0619
	Bonnet (PV15i)	A351 CF8M / 1.4408
6	* Post stem (21/2" to 4")	AISI 316L / 1.4404
7	* Stem	AISI 316L / 1.4404
8	* Gasket	Stainless steel / Graphite
9	Lock nut	A351 CF8 / 1.4308
10	Nut (PV15S)	EN 10269 steel
	Nut (PV15i)	Stainless steel A2-70
11	Stud (PV15S)	EN 10269 steel
	Stud (PV15i)	Stainless steel A2-70
12	* Packing nut	AISI 303 / 1.4305
13	Lock nut	AISI 304 / 4.4301
20	* Scraper ring	FPM; NBR
21	* Plain bearing	Bronze / PTFE
22	* O-ring	EPDM
23	* O-ring	FPM
24	* Chevron packing set	PTFE; Graphite filled PTFE
25	Washer	AISI 304 / 1.4301
26	* Stem guide	Stainless steel filled PTFE
27	* Spring	AISI 302 / 1.4310
28	* Chevron packing set	PTFE
29	O-ring guide	AISI 304 / 1.4301
30	* O-ring	EPDM
31	* O-ring	EPDM
32	* Packing set	Expanded graphite
33	Packing spacer	AISI 304 / 1.4301
34	* Safety packing set	Graphite filled PTFE
35	Bellows bonnet (PV15S)	A105 / 1.0432; AISI 316 / 1.4401
	Bellows bonnet (PV15i)	AISI 316 / 1.4401
36	Stud (PV15S)	EN 10269 steel
	Stud (PV15i)	Stainless steel A2-70
37	Gasket	Copper
38	Compression fitting	AISI 316 / 1.4401
39	* Gasket	Stainless steel / Graphite
40	* Gasket	Stainless steel / Graphite
41	* Metal bellows	AISI 316Ti / 1.4571
42	* Locking pin	AISI 303 / 1.4305
43	* Safety packing set	Expanded graphite
44	Packing spacer	AISI 304 / 1.4301
45	Nut (PV15S)	EN 10269 steel
	Nut (PV15i)	Stainless steel A2-70
46	PA Linear pneumatic actuator	See IS PA.010 – PA Linear pneumatic actuators

* Available spare parts.

We reserve the right to change the design and material of this product without notice.

ORDERING CODES PV15

VALVE MODEL	PV15	1	G	U	1	2	10	S	R	X	U	015	
PV15 – Pneumatic on/off globe valve, two-way, straight body	**PV15**												
VALVE SERIES													
Series 1 (1/2" to 4")		**1**											
Series 2 (21/2" to 4" / M16x1,5; 6")		**2**											
BODY MATERIAL													
A216 WCB / 1.0619 carbon steel			**S**										
A351 CF8M / 1.4408 stainless steel			**I**										
FLOW DIRECTION													
Flow under the plug				**U**									
STEM SEALING													
PTFE/GR V-Rings (V1.2)					**1**								
Virgin PTFE V-Rings (V2.2)					**2**								
Graphite (G1)					**3**								
EPDM (EP1)					**4**								
Graphite (G1) with extended bonnet					**6**								
Stainless steel bellows with PTFE/GR safety packing (BV1)					**8**								
Stainless steel bellows with graphite safety packing (BG1)					**9**								
VALVE SEALING													
Metal to metal (class V)						**2**							
Soft sealed with PTFE/GR (class VI)						**3**							
ACTUATOR MODEL													
PA10 (100 cm²)							**10**						
PA25 (250 cm²)							**25**						
PA40 (400 cm²)							**40**						
PA80 (800 cm²)							**80**						
PA80D (1600 cm²)							**8D**						
ACTUATOR CONSTRUCTION													
Mild steel construction (standard)								**S**					
Stainless steel construction								**I**					
ACTUATOR DIRECTION OF ACTION													
Air to open (stem extends by spring force)									**R**				
Air to close (stem retracts by spring force)									**D**				
OPTIONS													
None										**X**			
Top mounted handwheel **(a)**										**H**			
PIPE CONNECTIONS													
Flanged ASME B16.5 Class 150											**U**		
Flanged ASME B16.5 Class 300											**V**		
SIZE													
1/2"												**015**	
3/4"												**020**	
...													
SPECIAL CONSTRUCTION / ADDITIONAL OPTIONS													
A full description must to be provided and validated in case of a non-standard construction													**E**

(a) Not available in actuators with stainless steel construction (e.g. PA10i).

We reserve the right to change the design and material of this product without notice.