AIR AND GAS FLOAT TRAPS
FA16

DESCRIPTION

The ADCA FA16 series of fully automatic ball float traps are extremely compact, lightweight and specially designed for draining condensate from compressed air lines.
Usual applications include aftercoolers, separators and compressed air mains.

MAIN FEATURES

Corrosion resistant.
Replaceable internal parts.
Modulating discharge.
Unaffected by sudden or wide load and pressure variations.

OPTIONS:	Compression fitting. Hand purging knob.
USE:	Compressed air and other non corrosive gases compatible with the construction.
AVAILABLE MODELS:	FA16SS – stainless steel.
SIZES:	1/2" and 3/4".
CONNECTIONS:	Female threaded ISO 7 Rp or NPT. 1/2" or 3/4" vertical inlet (top to bottom). 1/2" vertical outlet.
INSTALLATION:	Vertical installation. It must be installed absolutely vertically at the points in the plant where condensate tends to collect. The drain should be piped to a safe position. See IMI – Installation and maintenance instructions.

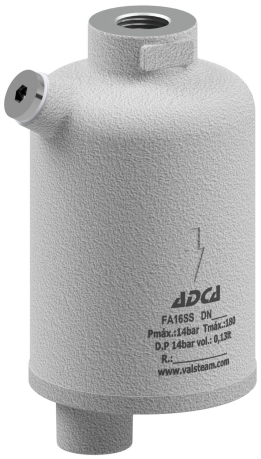

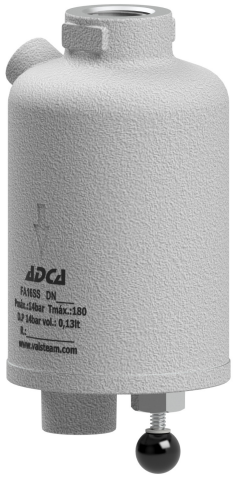

With hand purging knob

CE MARKING – GROUP 2 (PED – EUROPEAN DIRECTIVE)	
PN 16	**CATEGORY**
1/2" and 3/4"	SEP

BODY LIMITING CONDITIONS	
THREADED PN 16 **ALLOWABLE PRESSURE**	**RELATED TEMPERATURE**
16 bar	100 ºC
14,5 bar	150 ºC
13,4 bar	200 ºC
12,7 bar	250 ºC

PMO – Maximum operating pressure: 14 bar.
TMO – Maximum operating temperature: 180 ºC.
Minimum liquid specific weight: 0,75 kg/dm³.

We reserve the right to change the design and material of this product without notice.

FLOW RATE CAPACITY (kg/h)													
SIZE	DIFFERENTIAL PRESSURE (bar)												
	0,5	1	1,5	2	3	4	6	7	8	9	10	12	14
1/2" and 3/4"	120	145	180	190	230	250	300	330	340	360	380	400	430

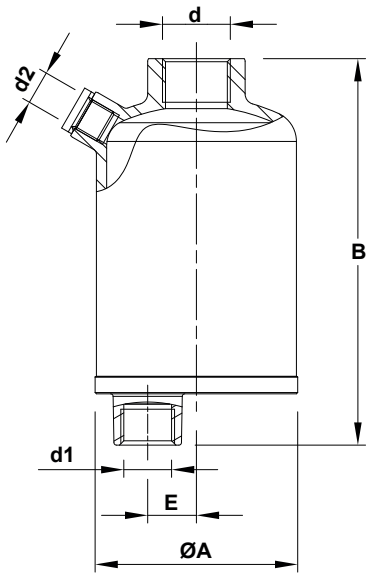

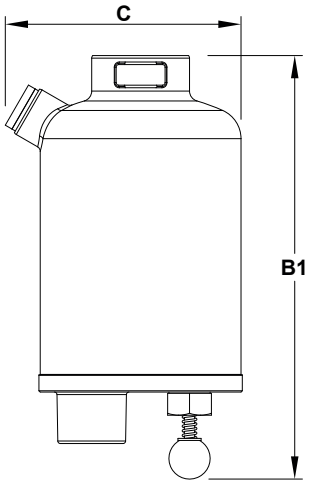

DIMENSIONS (mm)									
SIZE	ØA	B	B1	C	d	d1	d2	E	WEIGHT (kg)
1/2"	80	151	165	92	1/2"	1/2"	1/4"	19	1,6
3/4"	80	151	165	92	3/4"	1/2"	1/4"	19	1,6

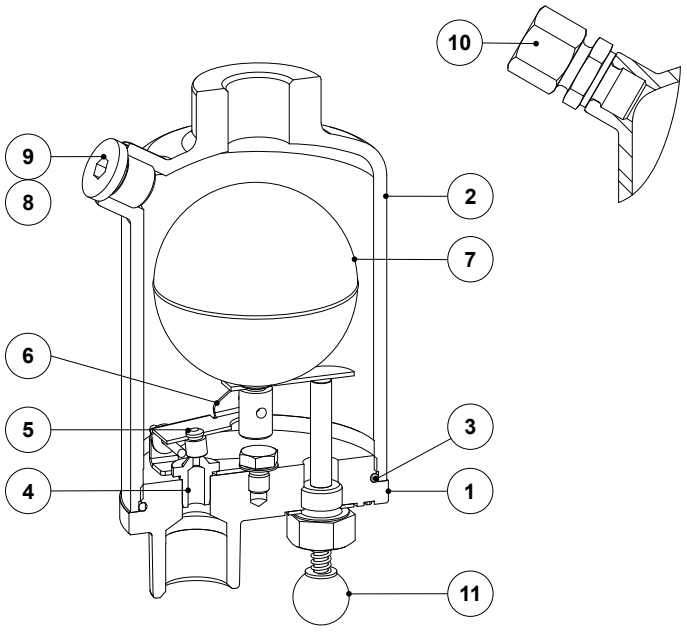

MATERIALS		
POS. No.	DESIGNATION	MATERIAL
1	Body	A351 CF8M / 1.4408; AISI 316 / 1.4401
2	Cover	A351 CF8M / 1.4408; AISI 316 / 1.4401
3	* O-ring	** EPDM
4	* Seat	AISI 316 / 1.4401
5	* Valve	** FPM
6	* Lever mechanism	AISI 304 / 1.4301
7	* Float	AISI 304 / 1.4301
8	* Gasket **(a)**	** PTFE
9	Plug	AISI 316L / 1.4404
10	Compression fitting **(b)**	AISI 316 / 1.4401
11	Hand purging knob **(b)**	AISI 304 / 1.4301; Plastic

* Available spare parts; ** Others on request.
(a) Not applicable in NPT version.
(b) Optional.

We reserve the right to change the design and material of this product without notice.