AUTOMATIC AIR AND GAS VENTS FOR LIQUID SYSTEMS
AE49.2
(Stainless steel ; 21/2" x 11/2" and 3" x 11/2" – DN 65 x 40 and DN 80 x 40)

DESCRIPTION

The ADCA AE49.2 is a series of high capacity automatic vents designed to remove air or gases from water and other liquid systems, without requiring any external source of energy.
They are capable of handling high loads during start-up while still being able to discharge smaller loads in continuous modulating operation with one single orifice.
These ball float type vents are manufactured in stainless steel, available with various soft sealing options, and can be used in combination with other air elimination and separation systems or directly applied at high points in the pipelines.





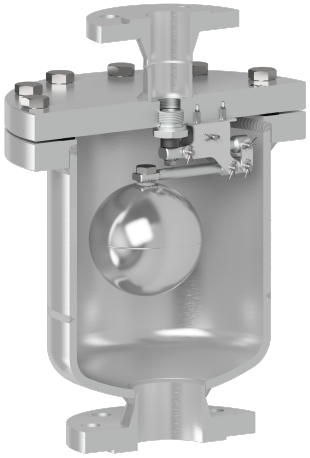

MAIN FEATURES

Suitable for start-up and continuous operation with one single orifice.
High capacity.
Allow fast and easy inline maintenance.
Corrosion resistant internal parts.
No balancing pipe required.

OPTIONS: Various soft sealing options.

USE: Cold, hot and superheated water or other liquids compatible with the construction.

AVAILABLE MODELS: AE49.2-5, AE49.2-10, AE49.2-20, AE49.2-28 and AE49.2-32 – stainless steel.

SIZES: 21/2" x 11/2" and 3" x 11/2";
DN 65 x 40 and DN 80 x 40.

CONNECTIONS: Female threaded ISO 7 Rp or NPT.
Flanged EN 1092-1 PN 40.
Flanged ASME B16.5 Class 150 or 300.
Socket weld (SW) ASME B16.11.

INSTALLATION: Inline vertical installation.
It must be installed absolutely vertically at the points in the plant where the air tends to collect.
See IMI – Installation and maintenance instructions.

ΔPMX: AE49.2-5 – 5 bar
AE49.2-10 – 10 bar
AE49.2-20 – 20 bar
AE49.2-28 – 28 bar
AE49.2-32 – 32 bar

CE MARKING – GROUP 2 (PED – EUROPEAN DIRECTIVE)		
PN 16	**PN 40**	**CATEGORY**
All sizes	–	1 (CE marked)
–	All sizes	2 (CE marked)

We reserve the right to change the design and material of this product without notice.

BODY LIMITING CONDITIONS				
FLANGED / PN 16 *	FLANGED / PN 40 *	FLANGED / CLASS 150 **	FLANGED / CLASS 300 **	RELATED TEMPERATURE
ALLOWABLE PRESSURE	ALLOWABLE PRESSURE	ALLOWABLE PRESSURE	ALLOWABLE PRESSURE	
16 bar	40 bar	15,3 bar	39,9 bar	50 ºC
15,1 bar	37,9 bar	13,3 bar	34,4 bar	100 ºC
12,7 bar	31,8 bar	11,1 bar	28,8 bar	200 ºC
11,9 bar	29,9 bar	10,2 bar	26,6 bar	250 ºC
11 bar	27,6 bar	9,7 bar	25,2 bar	300 ºC

PMO – Maximum operating pressure: 32 bar.
TMO – Maximum operating temperature: EPDM valve sealing: 130 ºC; FPM valve sealing: 200 ºC.
Minimum liquid specific weight: 0,75 kg/dm³.
* According to EN 1092-1:2018; ** According to EN 1759-1:2004.
Body limiting conditions PN 40 or below, depending on the type of connection adopted.

FLOW RATE CAPACITY (NL/min)														
MODEL	SIZE	DIFFERENTIAL PRESSURE (bar)												
		0,1	0,5	1	3	5	7	10	12	16	20	24	28	32
AE49.2-5	21/2" x 11/2" – DN 65 x 40 3" x 11/2" – DN 80 x 40	661	1446	1806	3522	5277	–	–	–	–	–	–	–	–
AE49.2-10	21/2" x 11/2" – DN 65 x 40 3" x 11/2" – DN 80 x 40	342	749	936	1825	2735	3645	5010	–	–	–	–	–	–
AE49.2-20	21/2" x 11/2" – DN 65 x 40 3" x 11/2" – DN 80 x 40	132	289	362	706	1059	1410	1939	2292	2996	3700	–	–	–
AE49.2-28	21/2" x 11/2" – DN 65 x 40 3" x 11/2" – DN 80 x 40	67	155	231	480	720	960	1319	1559	2038	2517	2247	2607	–
AE49.2-32	21/2" x 11/2" – DN 65 x 40 3" x 11/2" – DN 80 x 40	51	113	141	276	413	551	757	894	1170	1445	1720	1995	2271

Values shown refer to capacities of air discharge at 15 ºC, under atmospheric pressure (1013 mbar).
If the air temperature differs from 15 ºC, the discharge capacity can be corrected by multiplying it by: $\frac{288}{273 + T}$, where T is the actual temperature in ºC.
It may be assumed that the temperature of the air is equal to the temperature of the water.

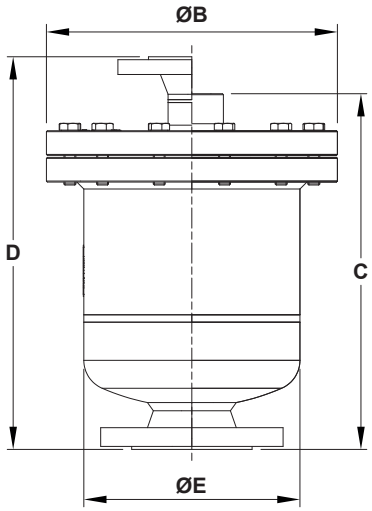

DIMENSIONS (mm)																
INLET *	PN 16				PN 40		PN 40		PN 16		PN 40		CLASS 150		CLASS 300	
OUTLET *	THREADED				THREADED		SW		PN 16		PN 40		CLASS 150		CLASS 300	
SIZE	ØB	C	ØE	WGT. (kg)	C	WGT. (kg)	C	WGT. (kg)	D	WGT. (kg)	D	WGT. (kg)	D	WGT. (kg)	D	WGT. (kg)
21/2" x 11/2" DN 65 x 40	295	346	219	35,2	353	35,8	358	36	384	36,9	391	37,5	394	37,7	406	40
3" x 11/2" DN 80 x 40	295	350	219	36	358	36,8	363	36,9	388	37,7	396	38,5	393	38,4	408	41,8

* For other combinations certified dimensions, consult the manufacturer.

We reserve the right to change the design and material of this product without notice.

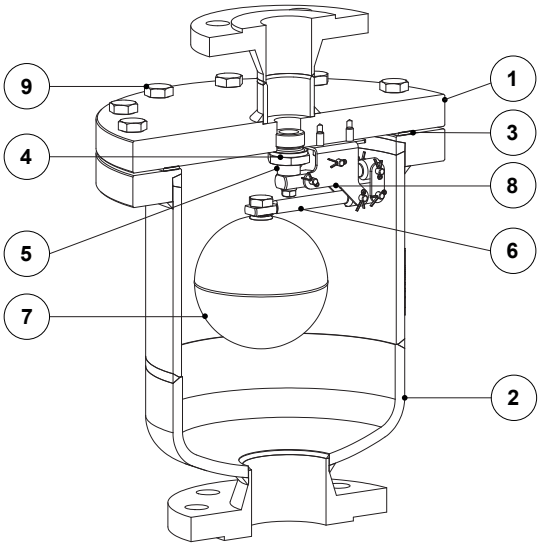

MATERIALS		
POS. No.	**DESIGNATION**	**MATERIAL**
1	Body	AISI 316L / 1.4404
2	Cover	AISI 316L / 1.4404
3	* Gasket	Stainless steel / Graphite
4	* Seat	AISI 316L / 1.4404
5	* Plug	FPM or EPDM
6	* Lever	AISI 316 / 1.4401; AISI 316L / 1.4404
7	* Float	AISI 304 / 1.4301
8	* Mechanism support bracket	AISI 304 / 1.4301
9	Bolt	Stainless steel A2-70

* Available spare parts.

FLOW DIRECTION

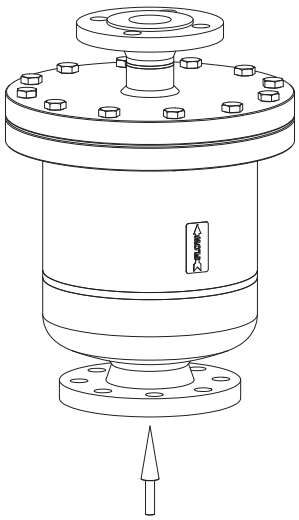

VT – Vertical from bottom to top

We reserve the right to change the design and material of this product without notice.

ORDERING CODES AE49.2										
MODEL	**AE492**	**2**	**E**	**XX**	**VT**	**A**	**40**	**L**	**65**	
AE49.2 – Stainless steel	**AE492**									
MAXIMUM ALLOWABLE DIFFERENTIAL PRESSURE (ΔPMX)										
5 bar		**2**								
10 bar		**3**								
20 bar		**5**								
28 bar		**6**								
32 bar		**7**								
VALVE SEALING										
EPDM			**E**							
FPM			**V**							
COVER CONNECTIONS										
None				**XX**						
OPTIONS										
If any, these have specific separate ordering codes, please refer to the appropriate documentation										
FLOW DIRECTION										
Inline vertical from bottom to top					**VT**					
OUTLET PIPE CONNECTION										
Female threaded ISO 7 Rp						**A**				
Female threaded NPT						**C**				
Socket weld (SW) ASME 16.11						**H**				
Flanged EN 1092-1 PN 16						**L**				
Flanged EN 1092-1 PN 40						**N**				
Flanged ASME B16.5 Class 150						**U**				
Flanged ASME B16.5 Class 300						**V**				
OUTLET SIZE										
11/2" or DN 40							**40**			
INLET PIPE CONNECTION										
Flanged EN 1092-1 PN 16								**L**		
Flanged EN 1092-1 PN 40								**N**		
Flanged ASME B16.5 Class 150								**U**		
Flanged ASME B16.5 Class 300								**V**		
INLET SIZE										
21/2" or DN 65									**65**	
3" or DN 80									**80**	
SPECIAL CONSTRUCTION / ADDITIONAL OPTIONS										
A full description must to be provided and validated in case of a non-standard construction										**E**

We reserve the right to change the design and material of this product without notice.