T STRAINERS
IS40T
(ASME)

DESCRIPTION

The ADCA IS40T cast steel T strainers are applicable in all types of steam, water, oil and air systems.
Their purpose is to protect traps, regulating valves, piping, etc. from dirt and impurities, which are often the cause of damage and consequent energy loss of fluid systems.





OPTIONS: Other screen apertures.
Drain plug or drain valve in strainer cap.

USE: Saturated steam, water, oil, air and other fluids compatible with the construction materials.

AVAILABLE MODELS: IS40TS – carbon steel.
IS40Ti – stainless steel.

SIZES: 1" to 4".

SCREENS: 0,5 mm aperture – 1".
1,5 mm aperture – 11/2" to 3".
2 mm aperture – 4".
Others on request.

CONNECTIONS: Flanged ASME B16.5 Class 150 or 300.

INSTALLATION: Horizontal or vertical installation.
See IMI – Installation and maintenance instructions.

CE MARKING – GROUP 2 (PED – EUROPEAN DIRECTIVE)		
CLASS 150	**CLASS 300**	**CATEGORY**
1" to 2"	1"	SEP
3" to 4"	11/2" to 4"	1 (CE marked)

BODY LIMITING CONDITIONS *

IS40TS				IS40Ti			
CLASS 150		CLASS 300		CLASS 150		CLASS 300	
ALLOWABLE PRESSURE	RELATED TEMPERATURE	ALLOWABLE PRESSURE	RELATED TEMPERATURE	ALLOWABLE PRESSURE	RELATED TEMPERATURE	ALLOWABLE PRESSURE	RELATED TEMPERATURE
19,3 bar	-10 / 50 ºC	50 bar	-10 / 50 ºC	18,4 bar	-10 / 50 ºC	48,1 bar	-10 / 50 ºC
15,8 bar	150 ºC	43,9 bar	200 ºC	14,8 bar	150 ºC	35,8 bar	200 ºC
12,1 bar	250 ºC	36,9 bar	350 ºC	12 bar	250 ºC	30,4 bar	350 ºC
8,4 bar	350 ºC	34,6 bar	400 ºC	8,4 bar	350 ºC	29,3 bar	400 ºC

* Rating according to EN 1759-1:2004.

We reserve the right to change the design and material of this product without notice.

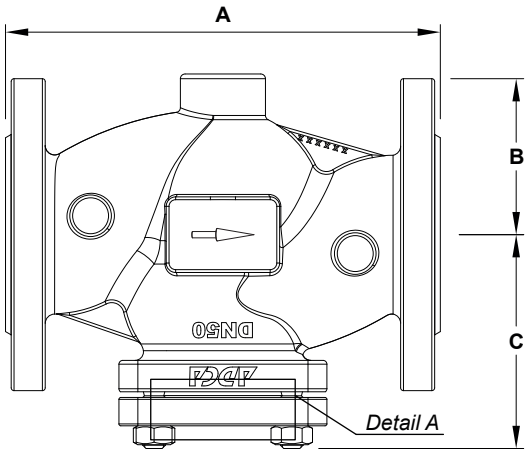

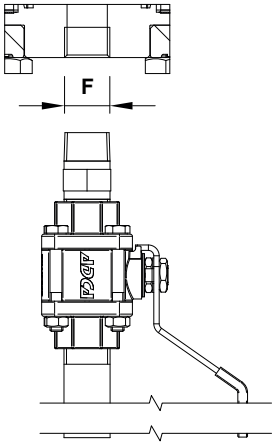

Detail A

DIMENSIONS (mm)							
SIZE	CLASS 150	CLASS 300	CLASS 150	CLASS 300	C	F *	WEIGHT (kg)
	A	A	B	B			
1"	184	197	54	62	87	1/2"	5,3
11/2"	222	235	63,5	78	105	1/2"	9,6
2"	254	267	76	82,5	115	1/2"	14
3"	298	318	95	105	155	1/2"	27,9
4"	352	368	114,5	127	165	1/2"	34,6

* Others on request.

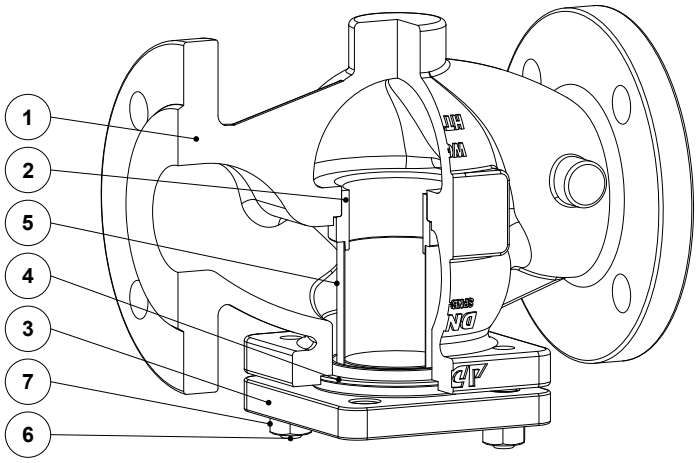

MATERIALS			
POS. No.	DESIGNATION	IS40TS	IS40Ti
1	Body	A216 WCB / 1.0619; GP240GH / 1.0619	A351 CF8M / 1.4408
2	Centering ring	AISI 304 / 1.4301	AISI 304 / 1.4301
3	Cover	AISI 304 / 1.4301	AISI 304 / 1.4301
4	* Gasket	Stainless steel / Graphite	Stainless steel / Graphite
5	* Strainer screen	AISI 304 / 1.4301	AISI 304 / 1.4301
6	Stud	EN 10269 steel	Stainless steel A2-70
7	Nut	EN 10269 steel	Stainless steel A2-70

* Available spare parts.

We reserve the right to change the design and material of this product without notice.