AIR AND GAS FLOAT TRAPS
FA25.3
(SG iron ; 11/2" and 2" – DN 40 and DN 50)

DESCRIPTION

The ADCA FA25.3 is a series of fully automatic ball float traps specially designed for condensate drainage in compressed air and gas systems.
Typical applications include aftercoolers, separators and compressed air mains.





MAIN FEATURES

Modulating discharge.
Unaffected by sudden or wide load and pressure variations.
Flow direction can be easily changed by repositioning the body in relation to the mechanism and cover.

OPTIONS:	Equalizing (vent) and drain connections. BDV – Blowdown valve. AFZ – Anti-freeze device. FLL – Float lifting lever.
USE:	Compressed air and other non corrosive gases compatible with the construction.
AVAILABLE MODELS:	FA25.3-4,5, FA25.3-10 and FA25.3-14 – SG iron.
SIZES:	11/2" and 2"; DN 40 and DN 50.
CONNECTIONS:	Female threaded ISO 7 Rp or NPT. Flanged EN 1092-2 PN 16. Flanged ASME B16.42 Class 150.
INSTALLATION:	Horizontal or vertical installation.
ΔPMX:	FA25.3-4,5 – 4,5 bar FA25.3-10 – 10 bar FA25.3-14 – 14 bar

CE MARKING – GROUP 2 (PED – EUROPEAN DIRECTIVE)	
PN 16	**CATEGORY**
11/2" and 2" – DN 40 and 50	SEP

BODY LIMITING CONDITIONS		
FLANGED PN 16 *	**FLANGED CLASS 150 ****	**RELATED TEMPERATURE**
ALLOWABLE PRESSURE	**ALLOWABLE PRESSURE**	
16 bar	16 bar	100 ºC
15,5 bar	14,8 bar	150 ºC
14,7 bar	13,9 bar	200 ºC
13,9 bar	12,1 bar	250 ºC

PMO – Maximum operating pressure: 14 bar; TMO – Maximum operating temperature: 250 ºC.
Minimum liquid specific weight: 0,75 kg/dm³.
* According to EN 1092-2:2018; ** According to ASME B16.42.
Body limiting conditions PN 16 or below, depending on the type of connection adopted. PN 16 for threaded version.

We reserve the right to change the design and material of this product without notice.

FLOW RATE CAPACITY (kg/h)										
MODEL	SIZE	DIFFERENTIAL PRESSURE (bar)								
		0,5	1	1,5	2	4,5	7	10	12	14
FA25.3-4,5	11/2" and 2" – DN 40 and 50	995	1450	1710	2000	2990	–	–	–	–
FA25.3-10	11/2" and 2" – DN 40 and 50	505	720	850	1010	1600	1890	2300	–	–
FA25.3-14	11/2" and 2" – DN 40 and 50	370	520	610	735	1150	1430	1620	1750	1980

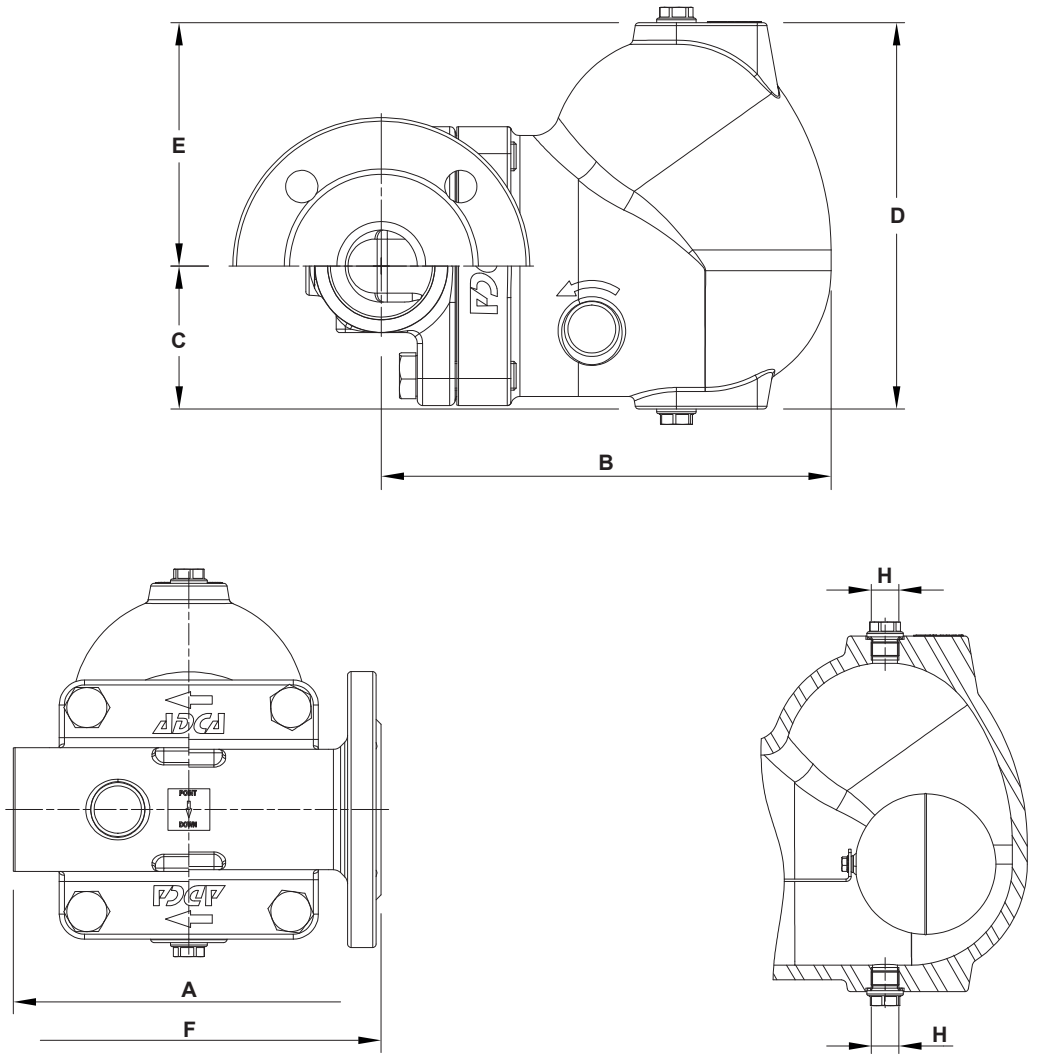

DIMENSIONS (mm)													
SIZE	THREADED							PN 16			CLASS 150		
	A	B	C	D	E	H *	WEIGHT (kg)	F	B	WEIGHT (kg)	F	B	WEIGHT (kg)
11/2" – DN 40	210	250	80	215	136	3/8"	18,9	230	250	21,7	230	250	20,2
2" – DN 50	210	250	80	215	136	3/8"	18,2	230	250	23,6	230	250	21,5

* As standard, in versions with EN flanges and female ISO 7 Rp threads, these connections are female threaded ISO 228. In versions with ASME flanges or female NPT threads, these connections are female threaded NPT.

We reserve the right to change the design and material of this product without notice.

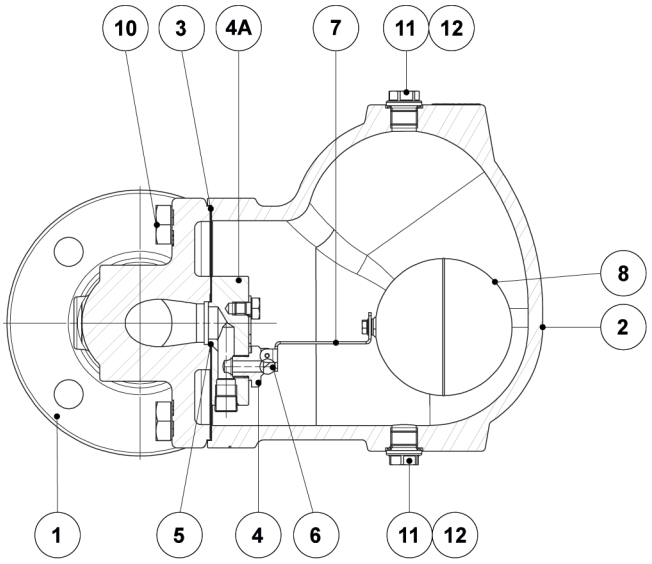

MATERIALS		
POS. No.	**DESIGNATION**	**MATERIAL**
1	Body	GJS-400-15 / 0.7040
2	Cover	GJS-400-15 / 0.7040
3	* Gasket	Stainless steel / Graphite
4	* Seat	AISI 410 / 1.4006
4A	Mounting plate	AISI 316 / 1.4401
5	* Gasket	Graphite
6	* Valve ball	AISI 440C / 1.4125
7	* Lever	AISI 304 / 1.4301
8	* Float	AISI 304 / 1.4301
10	Bolt	Zinc plated steel
11	Plug	AISI 316L / 1.4404
12	** Gasket	Copper; AISI 304 / 1.4301
31	Lever mechanism	AISI 303 / 1.4305; AISI 304 / 1.4301; AISI 316L / 1.4404
32	Packing	Graphite
33	Lever	Plastic
51	Blowdown valve	AISI 303 / 1.4305; AISI 316L / 1.4404
61	Anti-freeze device	AISI 303 / 1.4305; AISI 316L / 1.4404

* Available spare parts; ** Not applicable in NPT version.

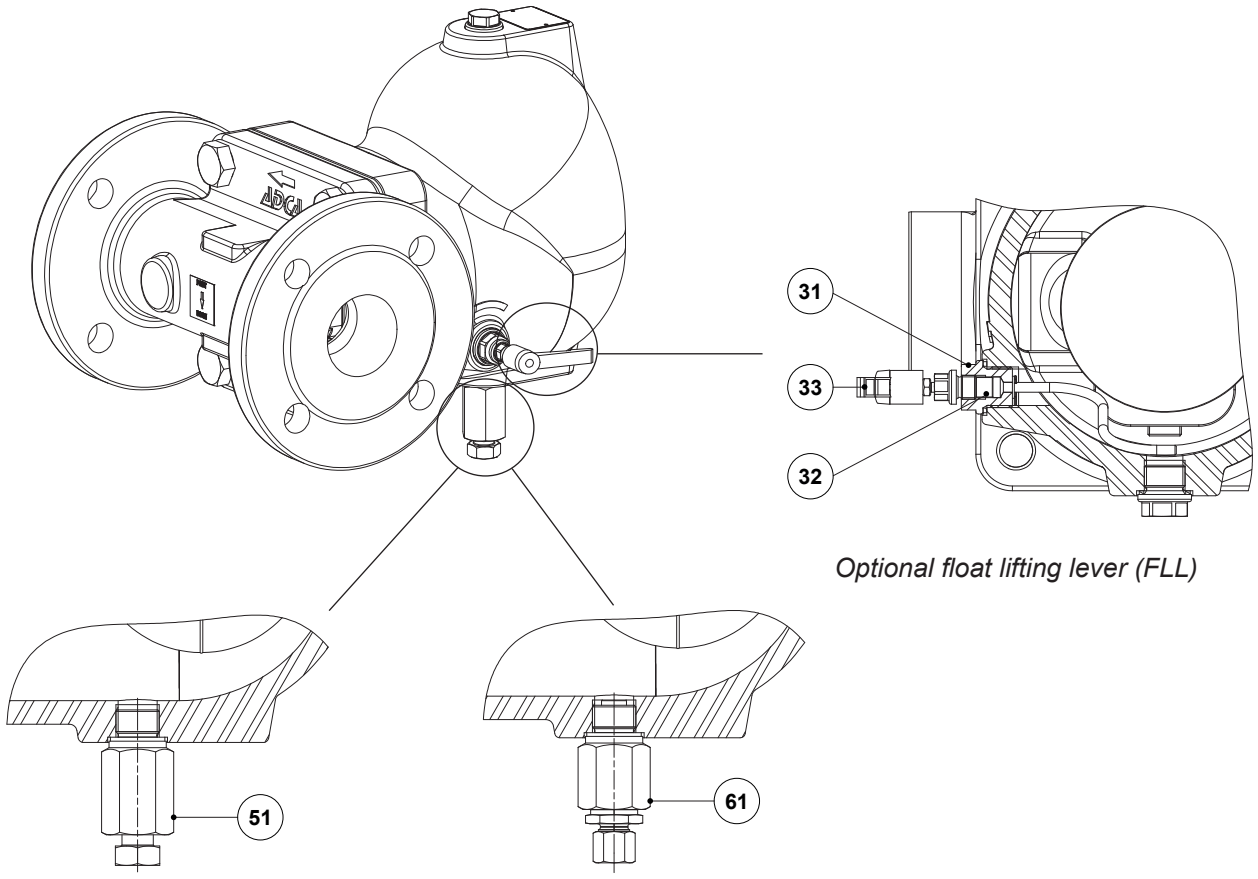

Optional float lifting lever (FLL)

Optional blowdown valve (BDV); Manual

Optional anti-freeze device (AFZ); Automatic

We reserve the right to change the design and material of this product without notice.

FLOW DIRECTION

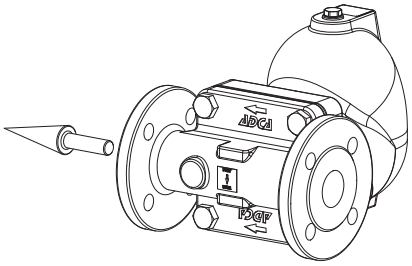

R – Horizontal from right to left

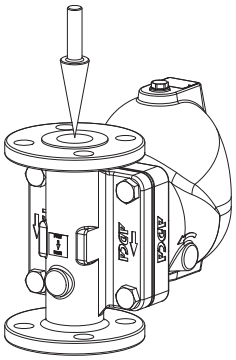

V – Vertical from top to bottom

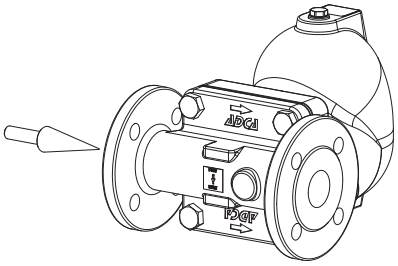

L – Horizontal from left to right

ORDERING CODES FA25.3									
MODEL	**FA253**	**2**	**M**	**XX**	**X**	**IR**	**A**	**40**	
FA25.3 – GJS-400-15 / 0.7040 SG iron	**FA253**								
MAXIMUM ALLOWABLE DIFFERENTIAL PRESSURE (ΔPMX)									
4,5 bar		**2**							
10 bar		**3**							
14 bar		**4**							
VALVE SEALING									
Metal to metal			**M**						
COVER CONNECTIONS									
None				**XX**					
3/8" threaded connections on top and bottom, closed with plugs (mandatory if any options are considered)				**10**					
OPTIONS									
BDV and AFZ have specific separated ordering codes, please refer to the appropriate documentation									
FLL – FLOAT LIFTING LEVER									
None					**X**				
Lifting lever on the right side (when facing the steam trap body)					**R**				
Lifting lever on the left side (when facing the steam trap body)					**L**				
FLOW DIRECTION									
Horizontal from right to left (standard)						**IR**			
Horizontal from left to right						**IL**			
Vertical from top to bottom						**IT**			
PIPE CONNECTIONS									
Female threaded ISO 7 Rp							**A**		
Female threaded NPT							**C**		
Flanged EN 1092-2 PN 16							**L**		
Flanged ASME B16.42 Class 150							**U**		
SIZE									
11/2" or DN 40								**40**	
2" or DN 50								**50**	
SPECIAL CONSTRUCTION / ADDITIONAL OPTIONS									
A full description must to be provided and validated in case of a non-standard construction									**E**