TWO-WAY GLOBE CONTROL VALVES
V25/2
(ASME)

DESCRIPTION

The ADCATrol V25/2 is a series of single seated, two-way globe valves designed for process engineering and industrial applications, where events such as erosion, cavitation or flashing may occur.
These valves can be assembled with pneumatic, hydraulic or electric actuators, for modulating and shut-off control tasks.



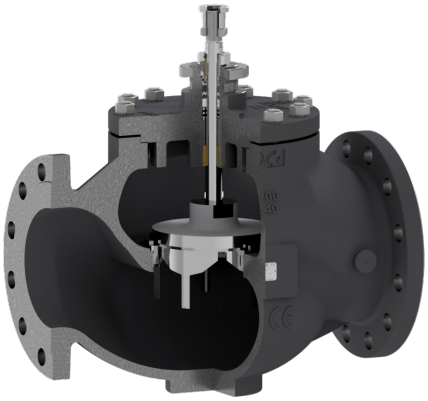

MAIN FEATURES

Robust construction.
Modular design to meet process requirements.
Stainless steel trim.

OPTIONS AND ACCESSORIES:
Bonnet extension for high and low temperatures.
Various stem sealing options including bellows sealing.
Soft, stellited and high-performance metal valve sealing.
V-port guided and perforated plugs.
Low noise, anti-cavitation single and multi-stage trims.
Reduced bore trims including microflow.
Pressure balancing trims.
Silencers.

USE:
Saturated and superheated steam.
Hot and superheated water.
Air, gases and others.

AVAILABLE MODELS:
V25/2S – carbon steel.
V25/2i – stainless steel (only available from 1/2" to 4").

VALVE SIZES: 1/2" to 6".

CONNECTIONS: Flanged ASME B16.5 Class 150 or 300.

CE MARKING – GROUP 2 (PED – EUROPEAN DIRECTIVE)		
CLASS 150	**CLASS 300**	**CATEGORY**
1/2" to 2"	1/2" to 1"	SEP
21/2" to 6"	11/2" to 4"	1 (CE marked)
–	6"	2 (CE marked)

We reserve the right to change the design and material of this product without notice.

BODY LIMITING CONDITIONS *							
V25/2S				V25/2i			
CLASS 150		CLASS 300		CLASS 150		CLASS 300	
ALLOW. PRESS.	RELAT. TEMP.	ALLOW. PRESS.	RELAT. TEMP.	ALLOW. PRESS.	RELAT. TEMP.	ALLOW. PRESS.	RELAT. TEMP.
19,3 bar	-10 / 50 ºC	50 bar	-10 / 50 ºC	18,4	-10 / 50 ºC	48,1	-10 / 50 ºC
15,8 bar	150 ºC	43,9 bar	200 ºC	14,4	200 ºC	35,8	200 ºC
12,1 bar	250 ºC	36,9 bar	350 ºC	12	350 ºC	30,4	350 ºC
8,4 bar	350 ºC	34,6 bar	400 ºC	8,4	400 ºC	29,3	400 ºC

* Rating according to EN 1759-1:2004.

BONNET DESIGN	
STANDARD	EXTENDED
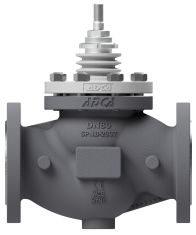	
-10 to 250 ºC	Above 250 ºC

TRIM DESIGN		
UNBALANCED TRIM	BALANCED TRIM	LOW NOISE (FD1)
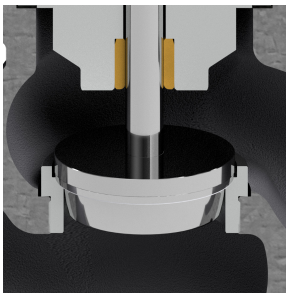	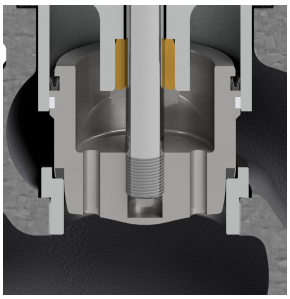	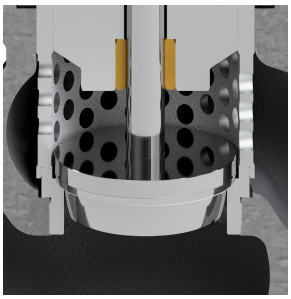

We reserve the right to change the design and material of this product without notice.

STEM SEALING

PTFE/GR V-RINGS (V1.2)	PTFE V-RINGS (V2.2)	EPDM (EP1)	GRAPHITE (G1)	BELLOWS	
				(BV1)	(BG1)
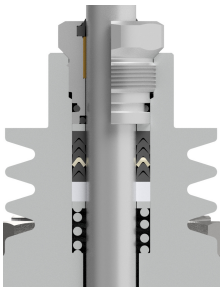	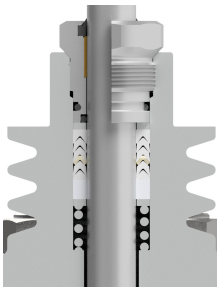	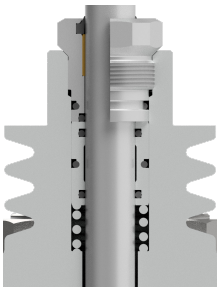	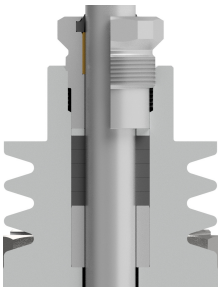	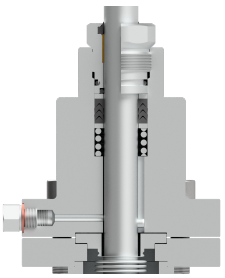	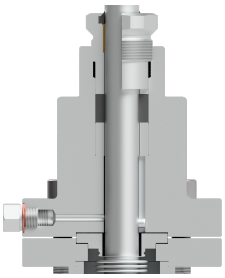
-10 to 220 ºC	-10 to 180 ºC	-10 to 150 ºC *	-10 to 400 ºC	-60 to 220 ºC **	-60 to 400 ºC **

* Up to 180 ºC in steam and hot water applications; ** Maximum operating pressure: 25 bar.

PLUG DESIGN

PARABOLIC



Sealing: Metal to metal
Characteristic: Equal percentage (EQP) or linear (PL)
Flow direction: From below
Rangeability: 50:1 (EQP) or 30:1 (PL)
Leakage: Class IV or Class V, acc. to IEC 60534-4

PARABOLIC (SOFT SEALING)



Sealing: PTFE/GR
Characteristic: Equal percentage (EQP) or linear (PL)
Flow direction: From below
Rangeability: 50:1 (EQP) or 30:1 (PL)
Leakage: Class VI, acc. to IEC 60534-4
Max. temp.: 200 ºC

PERFORATED



Sealing: Metal to metal
Characteristic: Equal percentage (EQP) or linear (PL)
Flow direction: From above (liquids) or from below (gases)
Rangeability: 40:1 (EQP) or 30:1 (PL)
Leakage: Class IV, acc. to IEC 60534-4

PARABOLIC MICROFLOW



Sealing: Metal to metal
Characteristic: Linear (PL)
Flow direction: From below
Rangeability: 30:1
Leakage: Class IV or Class V, acc. to IEC 60534-4

V-PORT GUIDED

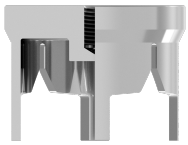

Sealing: Metal to metal
Characteristic: Equal percentage (EQP) or linear (PL)
Flow direction: From below
Rangeability: 30:1
Leakage: Class IV or Class V, acc. to IEC 60534-4

V-PORT GUIDED (SOFT SEALING)



Sealing: PTFE/GR *
Characteristic: Equal percentage (EQP) or linear (PL)
Flow direction: From below
Rangeability: 30:1
Leakage: Class VI, acc. to IEC 60534-4

* In soft sealing valves with seat Ø125 mm and Ø150 mm the PTFE/GR insert is placed on the seat rather than on the valve plug.

We reserve the right to change the design and material of this product without notice.

FLOW RATE COEFFICIENTS – PARABOLIC AND V-PORT GUIDED PL AND EQP PLUGS

SIZE	Kvs (m³/h)																		
	0,1 *	0,16 *	0,25 *	0,5 *	1	1,7	2,1	2,7	4	6,3	10	16	25	40	63	100	160	240	370
1/2"	●	●	●	●	●	●	●	●	●										
3/4"	●	●	●	●	●	●	●	●	●	●									
1"	●	●	●	●	●	●	●	●	●	●	●								
11/2"										●	●	●	●						
2"											●	●	●	●					
21/2"												●	●	●	●				
3"													●	●	●	●			
4"														●	●	●	●		
6"																●	●	●	●
SEAT Ø (mm)	4				8		12		15	19,2	25	32	38	48	65	76	96	125	150
STROKE (mm)	20														30			50	

* Microflow only available with linear characteristic.

FLOW RATE COEFFICIENTS – PERFORATED PL PLUGS

SIZE	Kvs (m³/h)										
	2,5	4	6,3	10	25	36	50	63	120	180	300
1/2"	●										
3/4"	●	●									
1"	●	●	●								
11/2"		●	●	●	●						
2"			●	●	●	●					
21/2"				●	●	●	●				
3"					●	●	●	●			
4"						●	●	●	●		
6"								●	●	●	●
SEAT Ø (mm)	15	19,2	25	32	38	48	65	76	96	125	150
STROKE (mm)	20						30			50	

FLOW RATE COEFFICIENTS – PERFORATED EQP PLUGS

SIZE	Kvs (m³/h)										
	2,5	4	6,3	10	16	25	36	50	80	120	250
1/2"	●										
3/4"	●	●									
1"	●	●	●								
11/2"		●	●	●	●						
2"			●	●	●	●					
21/2"				●	●	●	●				
3"					●	●	●	●			
4"						●	●	●	●		
6"								●	●	●	●
SEAT Ø (mm)	15	19,2	25	32	38	48	65	76	96	125	150
STROKE (mm)	20						30			50	

For conversion Kvs = Cv (US) x 0,865.

We reserve the right to change the design and material of this product without notice.

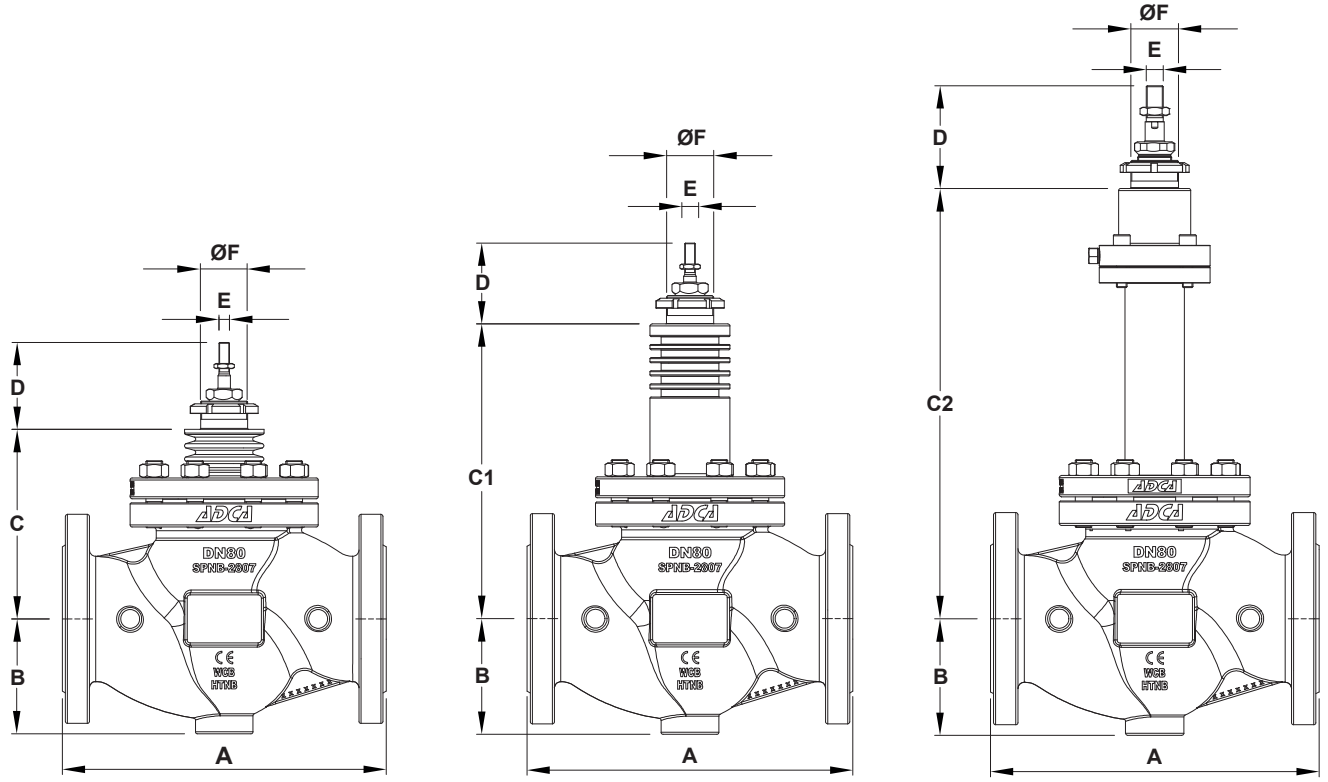

Valve with standard bonnet *Valve with extended bonnet* *Bellows sealed valve*

DIMENSIONS (mm)

DIMENSION		SIZE								
		1/2"	3/4"	1"	11/2"	2"	21/2"	3"	4"	6"
A	CLASS 150	184 **(a)**	184 **(a)**	184	222	254	276	298	352	451
	CLASS 300	190 **(a)**	194 **(a)**	197	235	267	292	318	368	473
B	CLASS 150	44,5	49	54	65	85	100	110	130	182
	CLASS 300	47,5	58,5	62	78	85	100	110	130	182
C		85	85	90	115	125	176	175	190	216
C1		150	150	170	195	204	276	275	310	320
C2		314	314	322	317	317	415	442	451	590
D		77					92			110
E		M10 x 1					M16 x 1,5			
ØF		M40 x 1,5					M45 x 1,5			M65 x 2

(a) With welded-on flanges.
Remark: In the beginning of year 2022 new face to face dimensions have been defined for some Class 150 valves. Valves may still be supplied with the previous face to face dimensions under request. Consult the manufacturer.

WEIGHTS (kg)

		SIZE								
		1/2"	3/4"	1"	11/2"	2"	21/2"	3"	4"	6"
STANDARD	CLASS 150	4,5	5	6,1	11,1	15,2	30,9	36,5	52,5	103,1
	CLASS 300	4,9	6	7,5	13,9	17,5	34	41,9	60,5	119,3
EXTENDED	CLASS 150	5,2	5,7	6,8	12,4	16,4	31,6	37	53,2	109,8
	CLASS 300	5,6	6,7	8,2	15,2	18,7	34,7	42,5	61,2	121,1
BELLOWS	CLASS 150	8,7	9,2	10,2	15,1	19	34,7	39,5	55,6	114,8
	CLASS 300	9,1	10,2	11,6	17,9	21,3	37,8	45,5	63,5	126,1

MAX. PERMISSIBLE ACTUATING THRUSTS (kN)

	SIZE								
	1/2"	3/4"	1"	11/2"	2"	21/2"	3"	4"	6"
MAX. THRUST	12					32,5			40,1

We reserve the right to change the design and material of this product without notice.

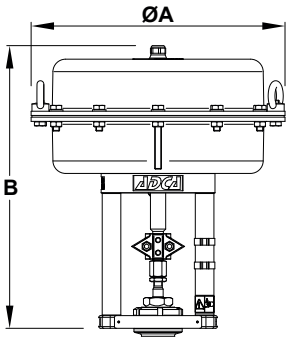

PA

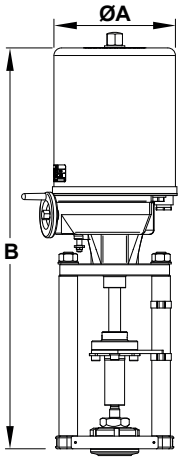

EL

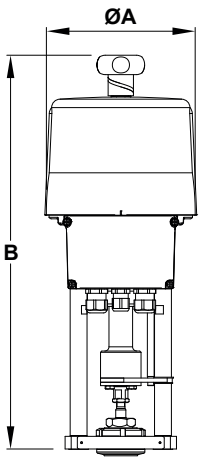

ELS

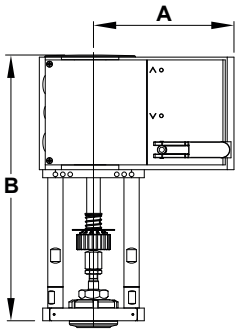

AV

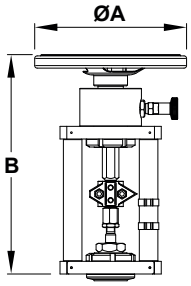

MAH

DIMENSIONS – PA SERIES PNEUMATIC ACTUATORS (mm)						
DIMENSION	**PA10**	**PA25**	**PA40**	**PA80**	**PA80D**	**PA80T**
ØA	170	250	300	405	405	405
B	251	260	325 / 360	505 / 515 / 545	741 / 771	967 / 997
WEIGHT (kg)	6,3	10,1	18,7 / 19,2	50,4 / 55,4 / 59,3	107,7 / 111,6	162 / 166

For more information, please consult IS PA.010 – PA Linear pneumatic actuators.

DIMENSIONS – EL SERIES ELECTRIC ACTUATORS (mm)						
DIMENSION	**EL12**	**EL20**	**EL45**	**EL80**	**EL120**	**EL250**
ØA	129	148	148	188	188	216
B	351	474	474	572	572	668
WEIGHT (kg)	2,1	8	8	13	13	19

For more information, please consult IS EL.012 – EL Linear electric actuators.

DIMENSIONS – ELS SERIES ELECTRIC ACTUATORS (mm)							
DIMENSION	**ELS20**	**ELS45**	**ELS80**	**ELS100**	**ELS140**	**ELS200**	**ELS250**
ØA	180	180	180	180	180	250	250
B	503 / 530	503 / 530	540 / 570	540 / 570	615 / 635	720	720
WEIGHT (kg)	4,5	4,5	7,2	7,2	8	23	23

For more information, please consult IS ELS.020 – ELS Linear electric actuators.

DIMENSIONS – AV SERIES ELECTRIC ACTUATORS (mm)		
DIMENSION	**AVM234S**	**AVF234S**
A	166	166
B	314	314
WEIGHT (kg)	4,1	4,1

For more information, please consult IS AVM.010 – AVM234S-AVF234S Linear electric actuators.

DIMENSIONS – MAH SERIES MANUAL OPERATED ACTUATORS (mm)			
DIMENSION	**MAH180**	**MAH250**	**MAH400**
ØA	180	250	400
B	260	295	428
WEIGHT (kg)	4,8	5,3	18,6

For more information, please consult IS MAH.010 – MAH Manual operated linear actuators.

We reserve the right to change the design and material of this product without notice.

MATERIALS

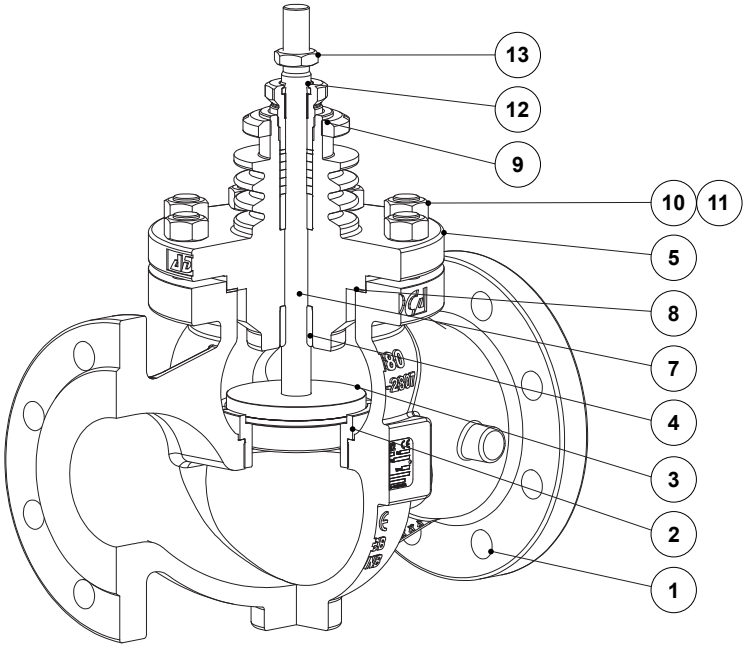

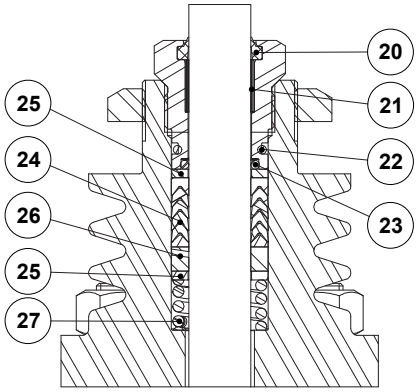

PTFE/GR V-Rings
(V1.2)

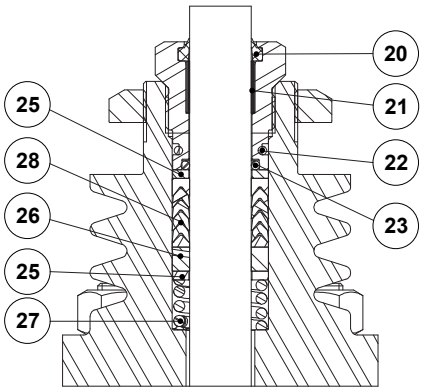

PTFE V-Rings
(V2.2)

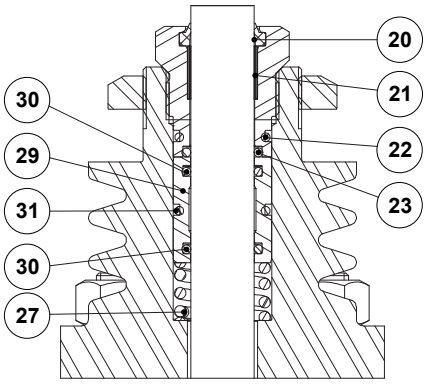

EPDM
(EP1)

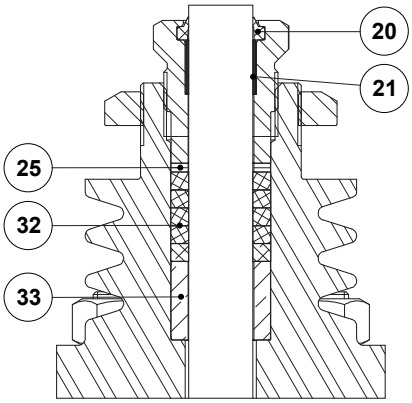

Graphite
(G1)

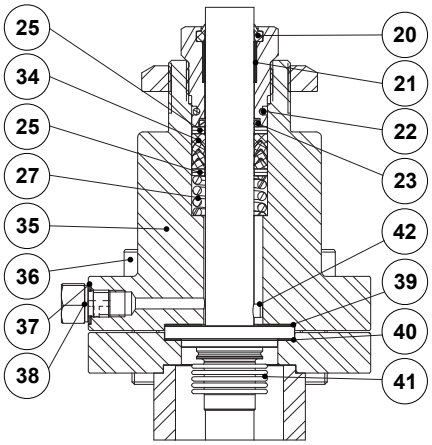

Bellows sealing
(BV1)

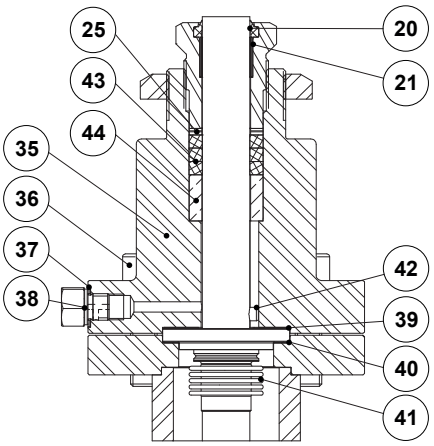

Bellows sealing
(BG1)

We reserve the right to change the design and material of this product without notice.

MATERIALS		
POS. No.	**DESIGNATION**	**MATERIAL**
1	Valve body (V25/2S)	A216 WCB / 1.0619
	Valve body (V25/2i)	A351 CF8M / 1.4408
2	* Seat	AISI 316L / 1.4404
3	* Valve plug	AISI 316L / 1.4404
4	Stem guide	** Bronze CB1
5	Bonnet (V25/2S)	A351 CF8M / 1.4408; A216 WCB / 1.0619
	Bonnet (V25/2i)	A351 CF8M / 1.4408
7	* Stem	AISI 316 / 1.4401
8	* Gasket	Stainless steel / Graphite
9	Lock nut	A351 CF8 / 1.4308
10	Nut (V25/2S)	EN 10269 steel
	Nut (V25/2i)	Stainless steel A2-70
11	Stud (V25/2S)	EN 10269 steel
	Stud (V25/2i)	Stainless steel A2-70
12	* Packing nut	AISI 303 / 1.4305
13	Lock nut	AISI 302 / 1.4310
20	* Scraper ring	FPM; NBR
21	* Plain bearing	Bronze / PTFE
22	* O-ring	EPDM
23	* O-ring	FPM
24	* Chevron packing set	PTFE
25	Washer	AISI 304 / 1.4301
26	* Stem guide	Stainless steel filled PTFE
27	* Spring	AISI 302 / 1.4310
28	* Chevron packing set	PTFE; Graphite filled PTFE
29	O-ring guide	AISI 304 / 1.4301
30	* O-ring	EPDM
31	* O-ring	EPDM
32	* Packing set	Expanded graphite
33	* Packing spacer	AISI 304 / 1.4301
34	* Safety packing set	Graphite filled PTFE
35	Bellows bonnet (V25/2S)	A105 / 1.0432; AISI 316 / 1.4401
	Bellows bonnet (V25/2i)	AISI 316 / 1.4401
36	Bolt or stud and nut (V25/2S)	EN 10269 steel
	Bolt or stud and nut (V25/2i)	Stainless steel A2-70
37	Gasket	Copper
38	Plug	AISI 316 / 1.4401
39	* Gasket	Stainless steel / Graphite
40	* Gasket	Stainless steel / Graphite
41	* Metal bellows	AISI 316Ti / 1.4571
42	* Locking pin	AISI 303 / 1.4305
43	* Safety packing set	Expanded graphite
44	Packing spacer	AISI 304 / 1.4301

* Available spare parts.
** Can be produced in PEEK (Tmax. 250 ºC) on request.

We reserve the right to change the design and material of this product without notice.

ORDERING CODES V25/2 (a)

VALVE MODEL	V2	2	S	S	1	U	1	1	1	E	FD	U	015	
V25/2 – Globe control valve, two-way, straight body	**V2**													
VALVE SERIES														
Series 2		**2**												
BODY MATERIAL														
A216 WCB / 1.0619 carbon steel			**S**											
A351 CF8M / 1.4408 stainless steel			**I**											
BONNET DESIGN														
Standard				**S**										
Extended				**E**										
TRIM DESIGN														
Unbalanced trim					**1**									
Balanced trim					**2**									
Unbalanced trim with FD1 low noise cage					**3**									
Balanced trim with FD1 low noise cage					**4**									
FLOW DIRECTION														
Flow under the plug						**U**								
Flow over the plug						**O**								
STEM SEALING														
PTFE/GR V-Rings (V1.2)							**1**							
Virgin PTFE V-Rings (V2.2)							**2**							
Graphite (G1)							**3**							
EPDM (EP1)							**4**							
Stainless steel bellows with PTFE/GR safety packing (BV1)							**8**							
Stainless steel bellows with graphite safety packing (BG1)							**9**							
PLUG DESIGN														
Parabolic								**1**						
V-port guided (standard for size 6")								**2**						
Perforated								**3**						
VALVE SEALING														
Metal to metal (class IV)									**1**					
Metal to metal (class V)									**2**					
Soft sealed with PTFE/GR (class VI)									**3**					
Stellited seat and plug (class IV)									**4**					
Stellited seat (class IV)									**5**					
CHARACTERISTIC														
Equal percentage (EQP)										**E**				
Linear (PL)										**L**				
FLOW RATE COEFFICIENT														
Kvs 4											**FD**			
See table below for other Kvs value codes														
PIPE CONNECTIONS														
Flanged ASME B16.5 Class 150												**U**		
Flanged ASME B16.5 Class 300												**V**		
SIZE														
1/2"													**015**	
3/4"													**020**	
...														
SPECIAL CONSTRUCTION / ADDITIONAL OPTIONS														
A full description must to be provided and validated in case of a non-standard construction														**E**

(a) Codification for valve only. For actuator codes, refer to the appropriate information sheet.

FLOW RATE COEFFICIENT CODES

Kvs	0,1	0,16	0,25	0,5	1	1,7	2,1	2,5 *	2,7	4	6,3	10	16	25
Code	M4	M3	M2	M1	R4	R3	R2	PA	R1	FD	FE	FF	FG	FH

Kvs	36 *	40	50 *	63	80 *	100	120 *	160	180 *	240	250 *	300 *	370	–
Code	PB	FI	PC	FJ	PD	FL	PE	FM	PF	FN	PG	PH	FO	–

* Only available with perforated plug design.

We reserve the right to change the design and material of this product without notice.