# BELLOWS SEALED STOP VALVES
# VF40

DESCRIPTION

The ADCA VF40 is a series of maintenance free inline stop valves designed with double wall bellow sealing, secondary safety packing and non-rising handwheel. They are specially recommended for steam, gas, liquid, condensate, thermal oil and water applications.



MAIN FEATURES

Maintenance free design.
High durability sealing via double wall bellows.
Secondary safety packing.
Non-rising handwheel.
External stem thread.

OPTIONS: Parabolic plug for throttling applications.

USE: Group 2 fluids compatible with the construction.

AVAILABLE MODELS: VF40S – carbon steel.
VF40i – stainless steel.

SIZES: DN 15 to DN 200.

CONNECTIONS: Flanged EN 1092-1 PN 40.
Others on request.

INSTALLATION: See IMI – Installation and maintenance instructions.

| CE MARKING – GROUP 2 (PED – EUROPEAN DIRECTIVE) | |
|---|---|
| **PN 40** | **CATEGORY** |
| DN 15 to 32 | SEP |
| DN 40 to 100 | 1 (CE marked) |
| DN 125 to 200 | 2 (CE marked) |

| BODY LIMITING CONDITIONS | | |
|---|---|---|
| **VF40S** | **VF40i** | **RELATED TEMPERATURE** |
| **ALLOWABLE PRESSURE** | **ALLOWABLE PRESSURE** | |
| 40 bar | 40 bar | -10 / 50 ºC |
| 37,4 bar | 40 bar | 100 ºC |
| 33,6 bar | 33,7 bar | 200 ºC |
| 27,8 bar | 29,7 bar | 300 ºC |

Remark: Lower temperature limits on request.

| FLOW RATE COEFFICIENTS ($m^3/h$) | | | | | | | | | | | | |
|---|---|---|---|---|---|---|---|---|---|---|---|---|
| **SIZE** | **DN 15** | **DN 20** | **DN 25** | **DN 32** | **DN 40** | **DN 50** | **DN 65** | **DN 80** | **DN 100** | **DN 125** | **DN 150** | **DN 200** |
| **Kvs** | 4,3 | 7 | 11 | 17,5 | 27 | 47 | 68 | 116 | 162 | 250 | 364 | 570 |

For conversion Kvs = Cv (US) x 0,855.



We reserve the right to change the design and material of this product without notice.

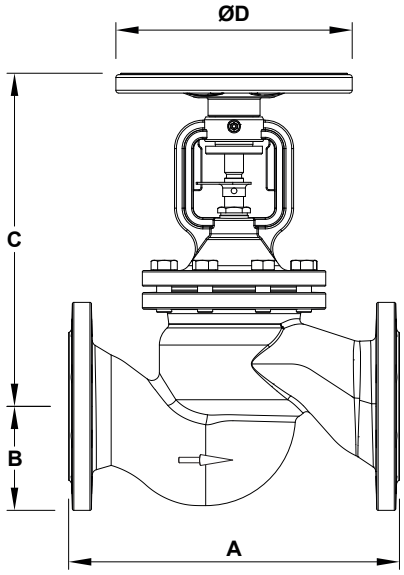


| DIMENSIONS (mm) | | | | | |
|---|---|---|---|---|---|
| **SIZE** | **A** | **B** | **C** | **ØD** | **WEIGHT (kg)** |
| **DN 15** | 130 | 47,5 | 189 | 120 | 4,3 |
| **DN 20** | 150 | 52,5 | 189 | 120 | 5,1 |
| **DN 25** | 160 | 57,5 | 189 | 120 | 5,8 |
| **DN 32** | 180 | 70 | 220 | 160 | 9,5 |
| **DN 40** | 200 | 75 | 220 | 160 | 9,8 |
| **DN 50** | 230 | 82,5 | 295 | 195 | 17,5 |
| **DN 65** | 290 | 92,5 | 295 | 195 | 20,5 |
| **DN 80** | 310 | 100 | 368 | 280 | 34 |
| **DN 100** | 350 | 117,5 | 368 | 280 | 44 |
| **DN 125** | 400 | 135 | 523 | 350 | 77 |
| **DN 150** | 480 | 150 | 523 | 350 | 110 |
| **DN 200** | 600 | 187,5 | 505 | 350 | 240 |

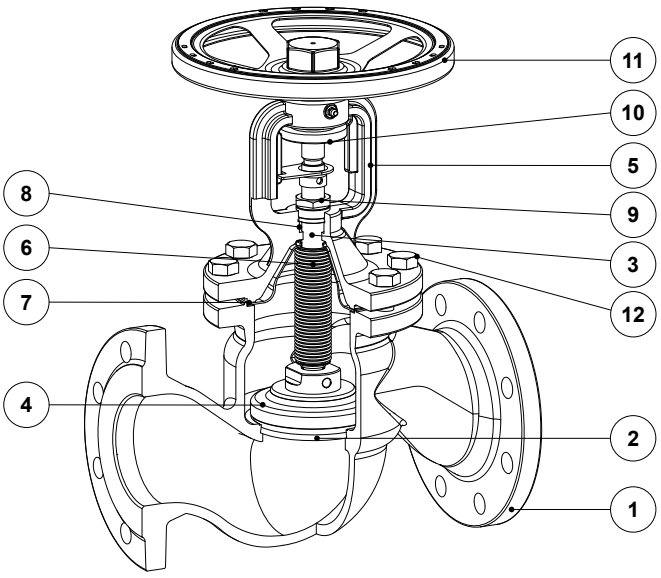


| MATERIALS | | |
|---|---|---|
| **POS. No.** | **DESIGNATION** | **MATERIAL** |
| **1** | Body (VF40S) | GP240GH / 1.0619 |
| | Body (VF40i) | GX5CrNiMo 19-11-2 / 1.4408; GX5CrNiMoNb 19-11-2 / 1.4581 |
| **2** | Seat | Stainless steel |
| **3** | * Spindle | Stainless steel |
| **4** | * Disc | Stainless steel |
| **5** | Bonnet (VF40S) | GP240GH / 1.0619 |
| | Bonnet (VF40i) | GX5CrNiMo 19-11-2 / 1.4408; GX5CrNiMoNb 19-11-2 / 1.4581 |
| **6** | * Bellows | Stainless steel |
| **7** | * Gasket | Stainless steel / Graphite |
| **8** | * Packing | Graphite |
| **9** | Gland nut | Zinc plated steel |
| **10** | Anti-friction disc | Zinc plated steel |
| **11** | Handwheel | Cast iron |
| **12** | Bolt | Stainless steel A2-70 |

* Available spare parts.



We reserve the right to change the design and material of this product without notice.