TWO-WAY GLOBE CONTROL VALVES
V16/2
(Threaded)

DESCRIPTION

The ADCATrol V16/2 is a series of single seated, two-way globe control valves designed for simple process engineering and industrial applications with non-critical operating conditions.
These valves can be assembled with pneumatic, hydraulic or electric actuators, for modulating and shut-off control tasks.



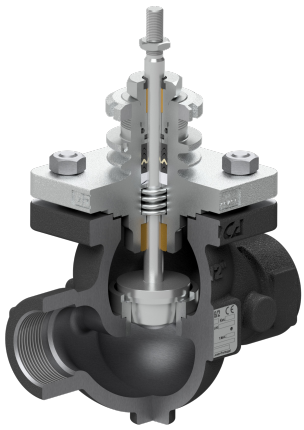

MAIN FEATURES

Compact and cost-effective.
Modular design to meet process requirements.
Parabolic plug design.
Stainless steel trim.

OPTIONS AND ACCESSORIES: Bonnet extension for high and low temperatures.
Various stem sealing options including bellows sealing.
Soft or stellited valve sealing.
Reduced bore trims including microflow.

USE: Saturated and superheated steam.
Hot and superheated water.
Air, gases and others.

AVAILABLE MODELS: V16/2S – carbon steel.
V16/2i – stainless steel.

SIZES: 1/2" to 2".

CONNECTIONS: Female threaded ISO 7 Rp or NPT.
Socket weld (SW) ASME B16.11.
Butt weld (BW) ASME B16.25 on request.

CE MARKING – GROUP 2 (PED – EUROPEAN DIRECTIVE)	
PN 40	**CATEGORY**
1/2" to 1"	SEP
11/2" and 2"	1 (CE marked)

BODY LIMITING CONDITIONS			
V16/2S		**V16/2i**	
ALLOW. PRESS.	**RELATED TEMP.**	**ALLOW. PRESS.**	**RELATED TEMP.**
40 bar	-10 / 50 ºC	40 bar	-10 / 50 ºC
33,3 bar	200 ºC	33,7 bar	200 ºC
27,6 bar	300 ºC	29,7 bar	300 ºC
25,7 bar	350 ºC	28,5 bar	350 ºC
23,8 bar	400 ºC	27,4 bar	400 ºC

We reserve the right to change the design and material of this product without notice.

BONNET DESIGN

STANDARD	EXTENDED
	
-10 to 250 ºC	Above 250 ºC

TRIM DESIGN

UNBALANCED TRIM



STEM SEALING

PTFE/GR V-RINGS (V1.2)	PTFE V-RINGS (V2.2)	EPDM (EP1)	GRAPHITE (G1)	BELLOWS (BV1)	BELLOWS (BG1)
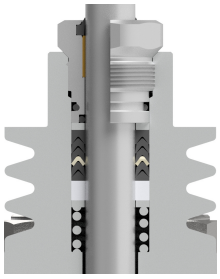	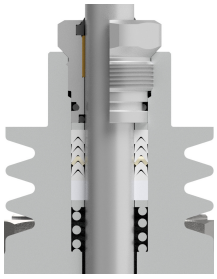	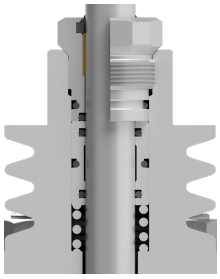	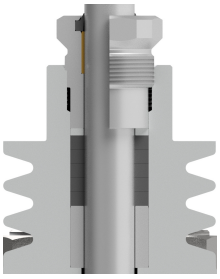	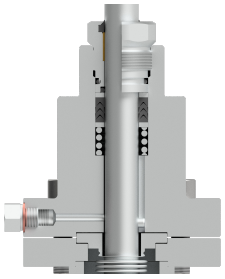	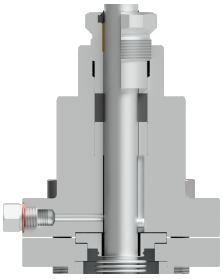
-10 to 220 ºC	-10 to 180 ºC	-10 to 150 ºC *	-10 to 400 ºC	-60 to 220 ºC **	-60 to 400 ºC **

* Up to 180 ºC in steam and hot water applications.
** Maximum operating pressure: 25 bar.

PLUG DESIGN

PARABOLIC



Sealing: Metal to metal
Characteristic: Equal percentage (EQP) or linear (PL)
Flow direction: From below
Rangeability: 50:1 (EQP) or 30:1 (PL)
Leakage: Class IV, acc. to IEC 60534-4

PARABOLIC (SOFT SEALING)



Sealing: PTFE/GR
Characteristic: Equal percentage (EQP) or linear (PL)
Flow direction: From below
Rangeability: 50:1 (EQP) or 30:1 (PL)
Leakage: Class VI, acc. to IEC 60534-4
Max. temp.: 200 ºC

FLOW RATE COEFFICIENTS – PARABOLIC PL AND EQP PLUGS

SIZE	Kvs (m³/h)													
	0,1 *	0,16 *	0,25 *	0,5 *	1	1,7	2,1	2,7	4	6,3	10	16	25	40
1/2"	●	●	●	●	●	●	●	●	●					
3/4"	●	●	●	●	●	●	●	●	●	●				
1"	●	●	●	●	●	●	●	●	●	●	●			
11/2"										●	●	●	●	
2"											●	●	●	●
SEAT Ø (mm)	4				8		12		15	19,2	25	32	38	48
STROKE (mm)	20													

* Microflow only available with linear characteristic.
For conversion Kvs = Cv (US) x 0,865.

We reserve the right to change the design and material of this product without notice.

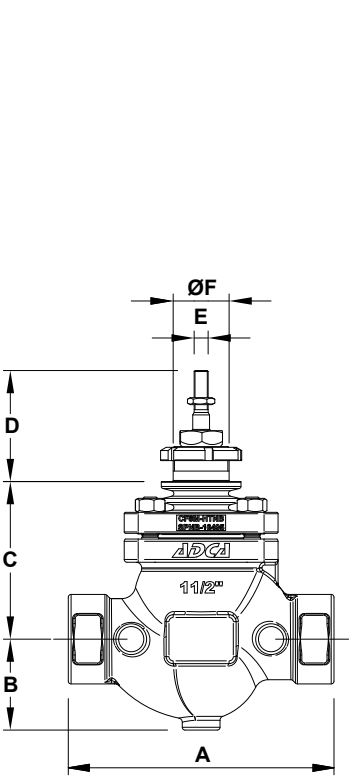

Valve with standard bonnet

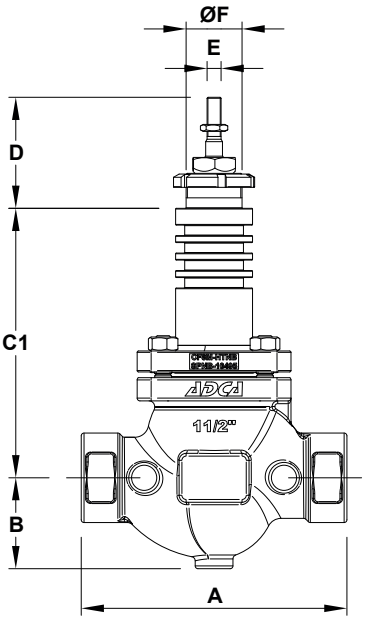

Valve with extended bonnet

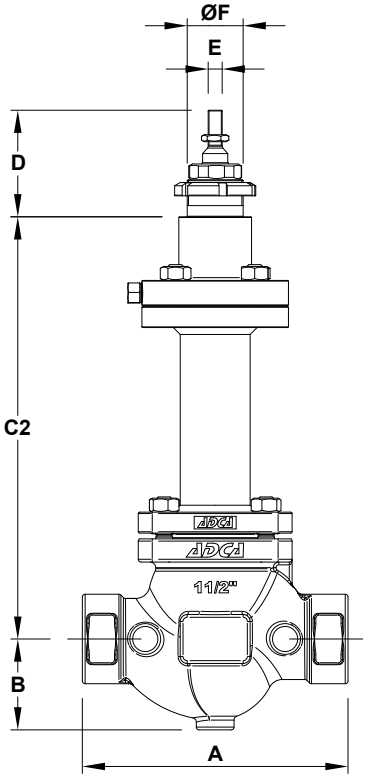

Bellows sealed valve

DIMENSIONS (mm)					
DIMENSION	**SIZE**				
	1/2"	**3/4"**	**1"**	**11/2"**	**2"**
A	100	100	100	190	220
B	37,5	37,5	37,5	65	81
C	103	103	103	113	125
C1	168	168	183	193	204
C2	294	294	292	303	303
D	80				
E	M10 x 1				
ØF	M40 x 1,5				

WEIGHTS (kg)					
	SIZE				
	1/2"	**3/4"**	**1"**	**11/2"**	**2"**
STANDARD	3,3	3,3	3,4	8,3	10,3
EXTENDED	4	4	4,1	9,6	11,6
BELLOWS	7,3	7,3	7,4	12,3	14,3

MAXIMUM PERMISSIBLE ACTUATING THRUSTS (kN)					
	SIZE				
	1/2"	**3/4"**	**1"**	**11/2"**	**2"**
MAX. THRUST	5,6			12	

We reserve the right to change the design and material of this product without notice.

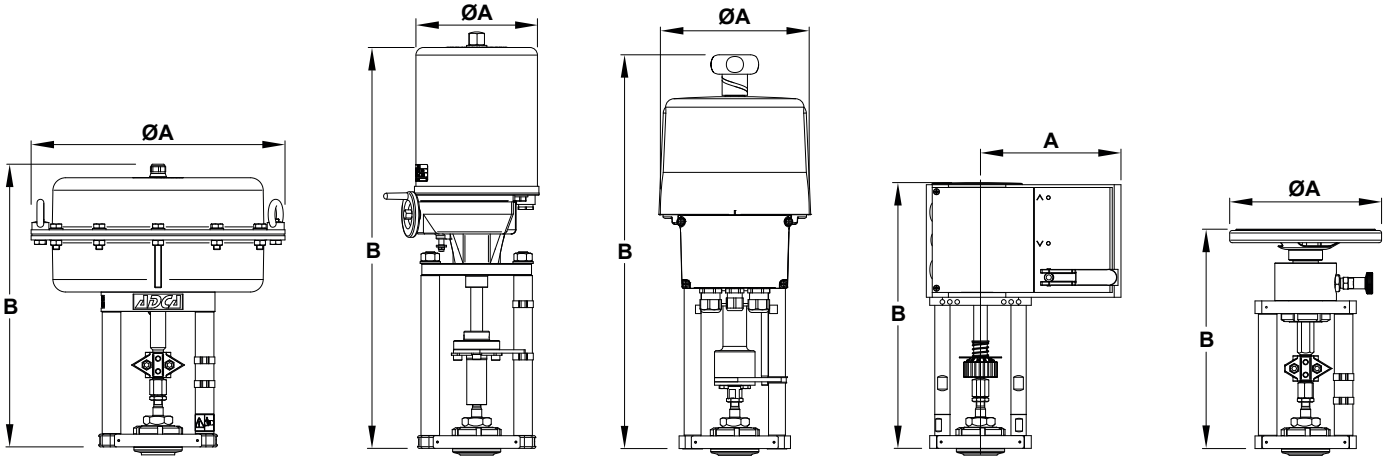

PA *EL* *ELS* *AV* *MAH*

DIMENSIONS – PA SERIES PNEUMATIC ACTUATORS (mm)			
DIMENSION	**PA10**	**PA25**	**PA40**
ØA	170	250	300
B	251	260	325
WEIGHT (kg)	6,3	10,1	18,7

For more information, please consult IS PA.010 – PA Linear pneumatic actuators.

DIMENSIONS – EL SERIES ELECTRIC ACTUATORS (mm)				
DIMENSION	**EL12**	**EL20**	**EL45**	**EL80**
ØA	129	148	148	188
B	315	474	474	572
WEIGHT (kg)	2,1	8	8	13

For more information, please consult IS EL.012 – EL Linear electric actuators.

DIMENSIONS – ELS SERIES ELECTRIC ACTUATORS (mm)			
DIMENSION	**ELS20**	**ELS45**	**ELS80**
ØA	180	180	180
B	503	503	540
WEIGHT (kg)	4,5	4,5	7,2

For more information, please consult IS ELS.020 – ELS Linear electric actuators.

DIMENSIONS – AV SERIES ELECTRIC ACTUATORS (mm)		
DIMENSION	**AVM234S**	**AVF234S**
A	166	166
B	314	314
WEIGHT (kg)	4,1	4,1

For more information, please consult IS AVM.010 – AVM234S-AVF234S Linear electric actuators.

DIMENSIONS – MAH SERIES MANUAL OPERATED ACTUATORS (mm)	
DIMENSION	**MAH180**
ØA	180
B	260
WEIGHT (kg)	4,8

For more information, please consult IS MAH.010 – MAH Manual operated linear actuators.

We reserve the right to change the design and material of this product without notice.

MATERIALS

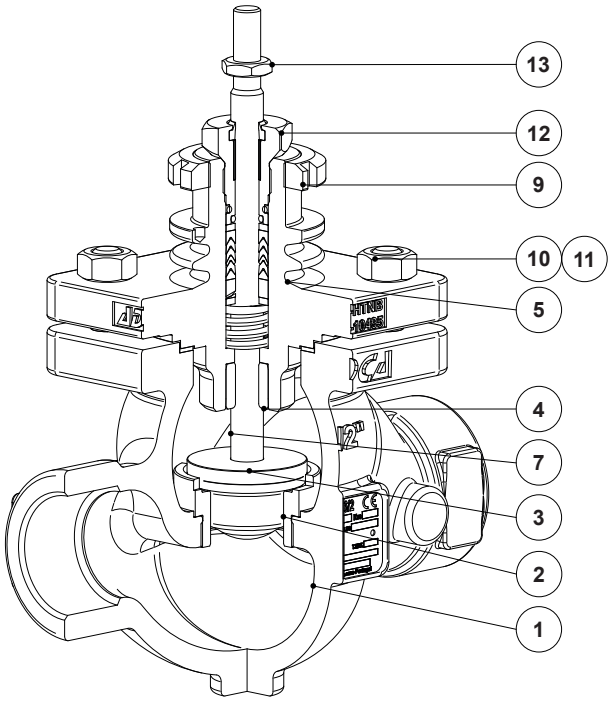

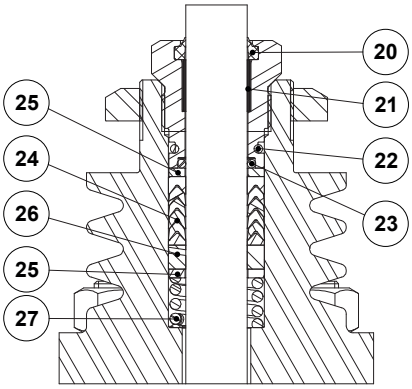

PTFE/GR V-Rings
(V1.2)

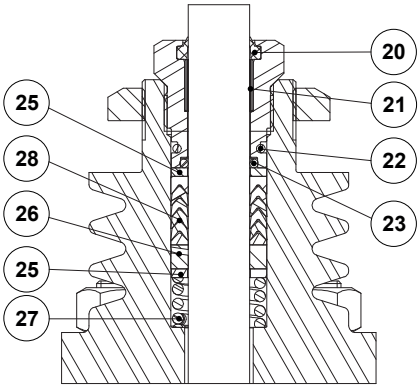

PTFE V-Rings
(V2.2)

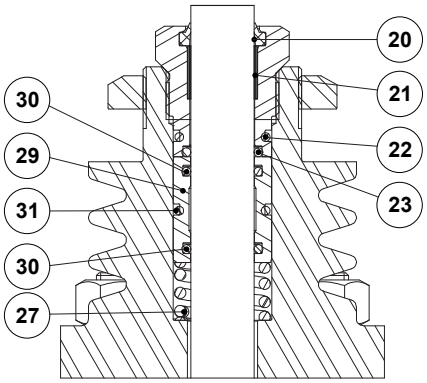

EPDM
(EP1)

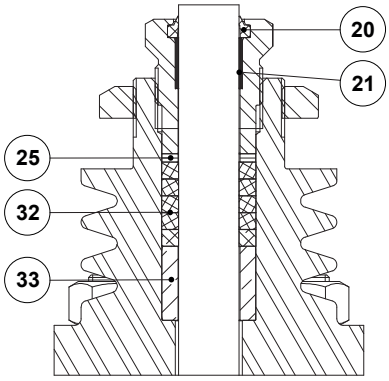

Graphite
(G1)

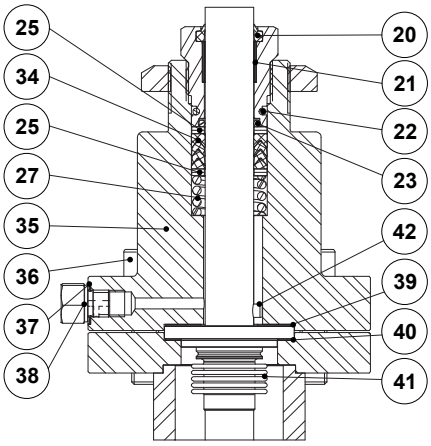

Bellows sealing
(BV1)

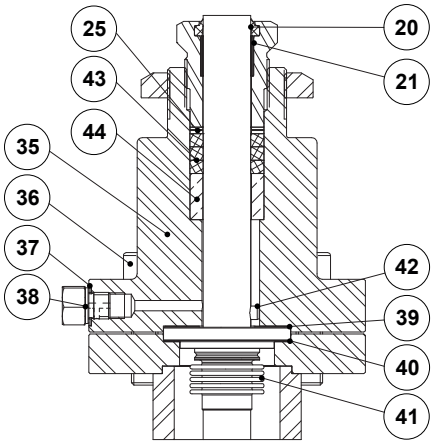

Bellows sealing
(BG1)

We reserve the right to change the design and material of this product without notice.

MATERIALS		
POS. No.	**DESIGNATION**	**MATERIAL**
1	Valve body (V16/2S)	A216 WCB / 1.0619
	Valve body (V16/2i)	A351 CF8M / 1.4408
2	* Seat	AISI 316L / 1.4404
3	* Valve plug	AISI 316L / 1.4404
4	Lower stem guide	** Bronze CB1
5	Bonnet (V16/2S)	A351 CF8M / 1.4408; A216 WCB / 1.0619
	Bonnet (V16/2i)	A351 CF8M / 1.4408
7	* Stem	AISI 316L / 1.4404
9	Lock nut	A351 CF8 / 1.4308
10	Nut (V16/2S)	EN 10269 steel
	Nut (V16/2i)	Stainless steel A2-70
11	Stud (V16/2S)	EN 10269 steel
	Stud (V16/2i)	Stainless steel A2-70
12	* Packing nut	AISI 303 / 1.4305
13	Lock nut	AISI 304 / 4.4301
20	* Scraper ring	FPM; NBR
21	* Plain bearing	Bronze / PTFE
22	* O-ring	EPDM
23	* O-ring	FPM
24	* Chevron packing set	PTFE; Graphite filled PTFE
25	Washer	AISI 304 / 1.4301
26	* Stem guide	Stainless steel filled PTFE
27	* Spring	AISI 302 / 1.4310
28	* Chevron packing set	PTFE
29	O-ring guide	AISI 304 / 1.4301
30	* O-ring	EPDM
31	* O-ring	EPDM
32	* Packing set	Expanded graphite
33	Packing spacer	AISI 304 / 1.4301
34	* Safety packing set	Graphite filled PTFE
35	Bellows bonnet (V16/2S)	A105 / 1.0432; AISI 316 / 1.4401
	Bellows bonnet (V16/2i)	AISI 316 / 1.4401
36	Bolt or stud and nut (V16/2S)	EN 10269 steel
	Bolt or stud and nut (V16/2i)	Stainless steel A2-70
37	Gasket	Copper
38	Plug	AISI 316 / 1.4401
39	* Gasket	Stainless steel / Graphite
40	* Gasket	Stainless steel / Graphite
41	* Metal bellows	AISI 316Ti / 1.4571
42	* Locking pin	AISI 303 / 1.4305
43	* Safety packing set	Expanded graphite
44	Packing spacer	AISI 304 / 1.4301

* Available spare parts.
** Can be produced in PEEK (Tmax. 250 ºC) on request.

We reserve the right to change the design and material of this product without notice.

LRQA CERTIFIED ISO 9001

ORDERING CODES V16/2 (a)

VALVE MODEL	V1	2	S	S	1	U	1	1	1	E	FD	A	015	
V16/2 – Globe control valve, two-way, straight body	**V1**													
VALVE SERIES														
Series 2		**2**												
BODY MATERIAL														
A216 WCB / 1.0619 carbon steel			**S**											
A351 CF8M / 1.4408 stainless steel			**I**											
BONNET DESIGN														
Standard				**S**										
Extended				**E**										
TRIM DESIGN														
Unbalanced trim					**1**									
FLOW DIRECTION														
Flow under the plug						**U**								
Flow over the plug						**O**								
STEM SEALING														
PTFE/GR V-Rings (V1.2)							**1**							
Virgin PTFE V-Rings (V2.2)							**2**							
Graphite (G1)							**3**							
EPDM (EP1)							**4**							
Stainless steel bellows with PTFE/GR safety packing (BV1)							**8**							
Stainless steel bellows with graphite safety packing (BG1)							**9**							
PLUG DESIGN														
Parabolic								**1**						
VALVE SEALING														
Metal to metal (class IV)									**1**					
Soft sealed with PTFE/GR (class VI)									**3**					
Stellited seat and plug (class IV)									**4**					
Stellited seat (class IV)									**5**					
CHARACTERISTIC														
Equal percentage (EQP)										**E**				
Linear (PL)										**L**				
FLOW RATE COEFFICIENT														
Kvs 4											**FD**			
See table below for other Kvs value codes														
PIPE CONNECTIONS														
Female threaded ISO 7 Rp												**A**		
Female threaded NPT												**C**		
Socket weld (SW) ASME B16.11												**H**		
SIZE														
1/2"													**015**	
3/4"													**020**	
...														
SPECIAL CONSTRUCTION / ADDITIONAL OPTIONS														
A full description must to be provided and validated in case of a non-standard construction														**E**

(a) Codification for valve only. For actuator codes, refer to the appropriate information sheet.

FLOW RATE COEFFICIENT CODES

Kvs	0,1	0,16	0,25	0,5	1	1,7	2,1	2,7	4	6,3	10	16	25	40
Code	M4	M3	M2	M1	R4	R3	R2	R1	FD	FE	FF	FG	FH	FI

We reserve the right to change the design and material of this product without notice.