WAFER-TYPE CHECK VALVES
RD40
(5" to 8" – DN 125 to DN 200)

DESCRIPTION

The ADCA RD40 disc check valves have a compact design and are specially designed for use with steam and hot condensate.

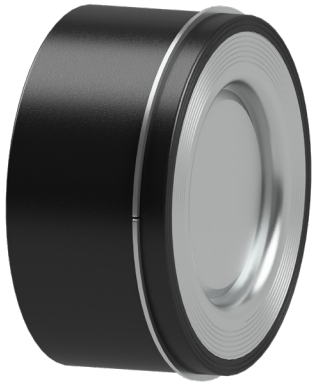



MAIN FEATURES

Low pressure drop.
Simple and compact design.
Overall lengths according to DIN EN 558-1 (DIN 3202 part 3, series K4).

OPTIONS: Various soft sealing options:
EPDM (E), NBR (N), FPM (V), PTFE (T).
Inconel springs.

USE: Saturated steam, water and other gases and liquids compatible with the construction.

AVAILABLE MODELS: RD40 – carbon steel body, stainless steel disc and seat.

SIZES: 5" to 8"; DN 125 to DN 200.

CONNECTIONS: Sandwiched between flanges as per EN 1092 or ASME.

INSTALLATION: Horizontal or vertical installation.
See IMI – Installation and maintenance instructions.

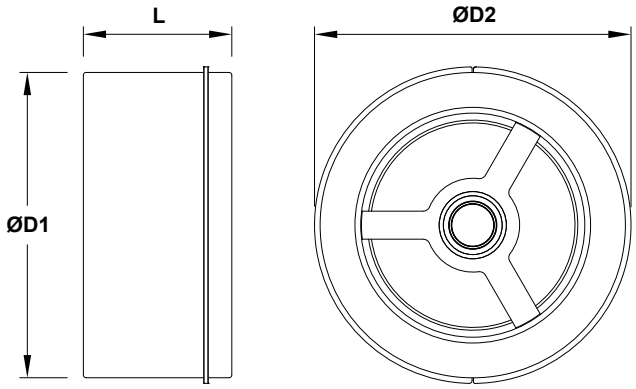

DIMENSIONS							
SIZE	PN 10/16	PN 40		CLASS 150	CLASS 300	L	WGT. (kg)
	ØD1	ØD1	ØD2 *	ØD1	ØD2 *		
5" – DN 125	192	192	–	192	212	90	10
6" – DN 150	218	–	226	218	247	106	14
8" – DN 200	273	–	290	273	304	140	24

* Centering ring required.

CE MARKING – GROUP 2 (PED – European Directive)			
PN 16	CATEGORY	PN 40	CATEGORY
DN 125 to 200	1 (CE marked)	DN 125 to 200	2 (CE marked)

BODY LIMITING CONDITIONS			
WAFER PN 16 *		WAFER PN 40 *	
ALLOW. PRESSURE	RELATED TEMP.	ALLOW. PRESSURE	RELATED TEMP.
14,8 bar	100 ºC	37,1 bar	100 ºC
13,3 bar	200 ºC	33,3 bar	200 ºC
12,1 bar	250 ºC	30,4 bar	250 ºC
11 bar	300 ºC	27,6 bar	300 ºC

* According to EN 1092.
Minimum operating temperature: -10 ºC.

RECOMMENDED LIMITS OF OPERATION WITH SOFT SEALS			
EPDM (E)	NBR (N)	FPM (V)	PTFE (T)
130 ºC	95 ºC	180 ºC	180 ºC

We reserve the right to change the design and material of this product without notice.

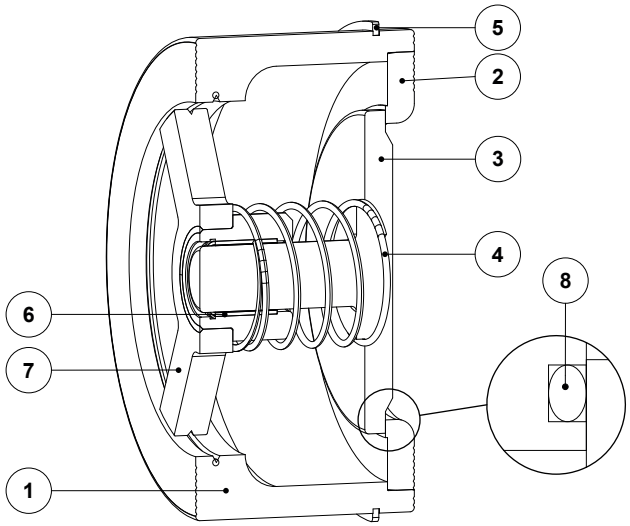

MATERIALS		
POS. No.	**DESIGNATION**	**MATERIAL**
1	Body	S355JR / 1.0045
2	Seat	AISI 316 / 1.4401
3	* Disc	AISI 316 / 1.4401
4	* Spring	AISI 302 / 1.4300
5	Centering ring	AISI 304 / 1.4301
6	Bearing	Steel Fe Zn
7	Star	S355JR / 1.0045
8	* Soft seal	EPDM; NBR; FPM; PTFE

* Available spare parts.

MINIMUM OPENING PRESSURES WITH STANDARD SPRING (mbar)			
SIZE	**D.P. ↑**	**D.P. ⟶**	**D.P. ↓**
5" – DN 125	37	22	7
6" – DN 150	40	25	10
8" – DN 200	46	28	10

→ : Flow direction.

PRESSURE DROP, HORIZONTAL FLOW, STANDARD SPRING (WATER AT 20°)

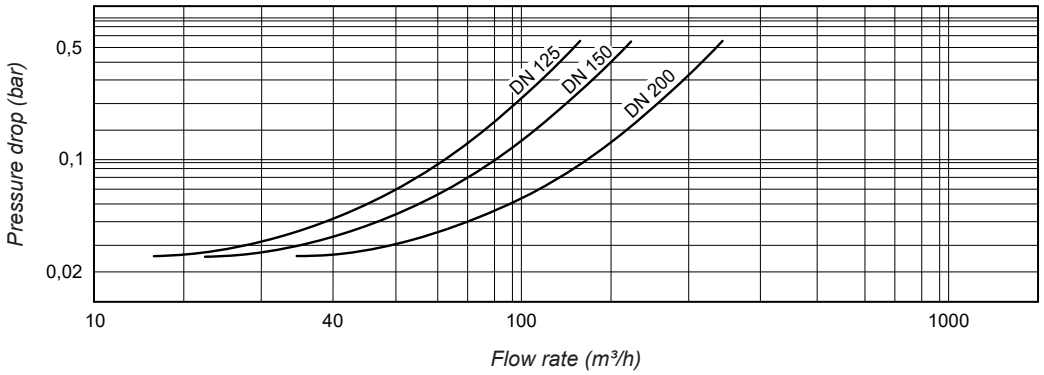

To determine the pressure drop of other mediums the equivalent water flow volume has to be calculated: $\dot{V}_w = \sqrt{\frac{\rho}{1000}} \times \dot{V}$

$\dot{V}_w$ = Equivalent water flow volume in m³/h; ρ = Density in kg/m³; $\dot{V}$ = Flow volume in m³/h

We reserve the right to change the design and material of this product without notice.