AUTOMATIC AIR AND GAS VENTS FOR LIQUID SYSTEMS
AE50

DESCRIPTION

The ADCA AE50 is a series of automatic vents designed to remove air or gases from water and other liquid systems, without requiring any external source of energy.
These ball float type vents are manufactured in carbon or stainless steel, available with metal or soft sealing, and can be used in combination with other air elimination and separation systems or directly applied at high points in the pipelines.





MAIN FEATURES

Allows fast and easy inline maintenance.
Corrosion resistant internal parts.
No balancing pipe required.

OPTIONS: Different soft sealing options.
Metal to metal sealing.

USE: Cold, hot and superheated water or other liquids compatible with the construction.

AVAILABLE MODELS: AE50S – carbon steel.
AE50i – stainless steel.

SIZES: 1/2" x 1/2", 3/4" x 1/2" and 1" x 1/2";
DN 15 x 1/2", DN 20 x 1/2" and DN 25 x 1/2".

CONNECTIONS: Female threaded ISO 7 Rp or NPT.
Flanged EN 1092-1 PN 40.
Flanged ASME B16.5 Class 150 or 300.

INSTALLATION: Vertical installation.
It must be installed absolutely vertically at the points in the plant where the air tends to collect. The drain should be piped to a safe position.
See IMI – Installation and maintenance instructions.

CE MARKING – GROUP 2 (PED – EUROPEAN DIRECTIVE)	
PN 40	**CATEGORY**
All sizes	SEP

BODY LIMITING CONDITIONS

AE50S		AE50i		RELATED TEMPERATURE
FLANGED PN 40 / CLASS 300 *	FLANGED CLASS 150 **	FLANGED PN 40 / CLASS 300	FLANGED CLASS 150 **	
ALLOWABLE PRESSURE	ALLOWABLE PRESSURE	ALLOWABLE PRESSURE	ALLOWABLE PRESSURE	
37,1 bar	17,7 bar	30 bar	13,3 bar	100 ºC
33,3 bar	14 bar	28,8 bar	11,1 bar	200 ºC
30,4 bar	12,1 bar	26,6 bar	10,2 bar	250 ºC
27,6 bar	10,2 bar	25,2 bar	9,7 bar	300 ºC

PMO – Maximum operating pressure: 30 bar.
TMO – Maximum operating temperature: Metal to metal sealing: 250 ºC; EPDM valve sealing: 130 ºC; FPM valve sealing: 200 ºC.
Minimum liquid specific weight: 0,75 kg/dm³.
* According to EN 1092-1:2018. ** According to EN 1759-1:2004.
Body limiting conditions PN 40 or below, depending on the type of connection adopted. Rating PN 40 for threaded versions.

We reserve the right to change the design and material of this product without notice.

FLOW RATE CAPACITY (NL/min)																		
MODEL	DIFFERENTIAL PRESSURE (bar)																	
	0,5	1	2	3	4	5	6	7	8	9	10	12	15	18	20	22	25	30
AE50S and AE50i	31	46	72	96	120	144	168	192	216	241	265	313	385	457	505	553	626	746

Values shown refer to capacities of air discharge at 15 ºC, under average atmospheric pressure (1013 mbar).
If the air temperature differs from 15 ºC, the discharge capacity can be corrected by multiplying it by: $\frac{288}{273 + T}$, where T is the actual temperature in ºC.
It may be assumed that the temperature of the air is equal to the temperature of the water.

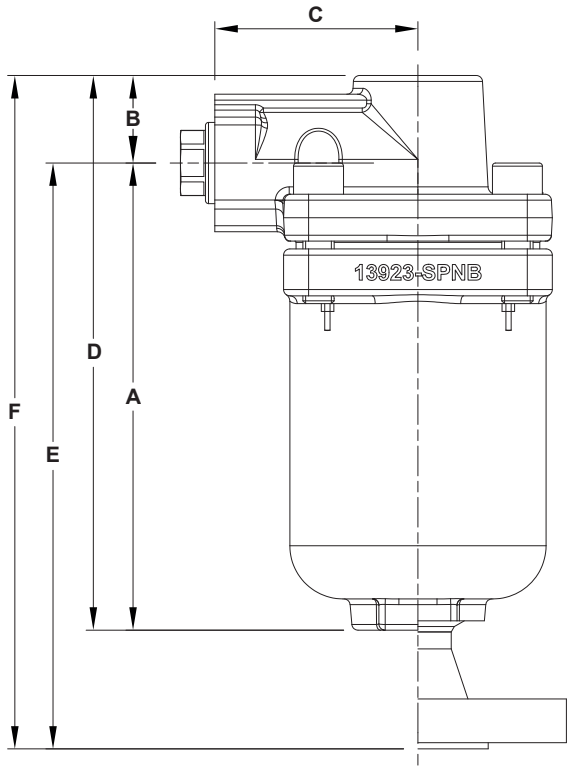

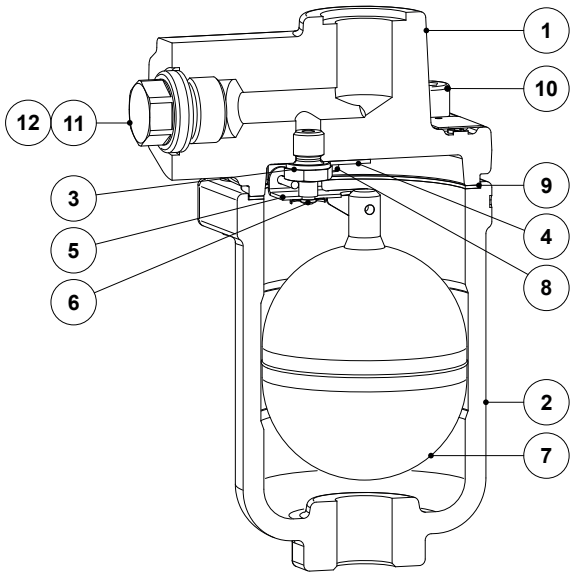

DIMENSIONS (mm)														
INLET	THREADED					PN 40			CLASS 150			CLASS 300		
SIZE	A	B	C	D	WGT. (kg)	E	F	WGT. (kg)	E	F	WGT. (kg)	E	F	WGT. (kg)
1/2" x 1/2" – DN 15 x 1/2"	149	28	65	177	3,6	187	215	4,4	197	225	4,1	202	230	4,4
3/4" x 1/2" – DN 20 x 1/2"	149	28	65	177	3,6	189	217	4,7	202	230	4,3	207	235	4,9
1" x 1/2" – DN 25 x 1/2"	149	28	65	177	3,6	189	217	4,8	205	233	4,6	211	239	5,2

Remarks: As standard, in versions with EN flanged or female Rp threaded inlets, the outlet is female threaded ISO 228. In versions with ASME flanged or female NPT threaded inlets, the outlet is female threaded NPT.

MATERIALS			
POS. No.	DESIGNATION	AE50S	AE50i
1	Body	P250GH / 1.0460	AISI 316L / 1.4404
2	Cover	A216 WCB / 1.0619	A351 CF8M / 1.4408
3	* Seat	AISI 316L / 1.4404	AISI 316L / 1.4404
4	Mechanism support	AISI 304 / 1.4301	AISI 316
5	* Lever mechanism	AISI 304 / 1.4301	AISI 304 / 1.4301 **
6	* Valve	AISI 316 / 1.4401; EPDM; FPM	AISI 316 / 1.4401; EPDM; FPM
7	* Float	AISI 316Ti / 1.4571	AISI 316Ti / 1.4571
8	Bolt	Stainless steel A4-70	Stainless steel A4-70
9	* Gasket	Stainless steel / Graphite	Stainless steel / Graphite
10	Bolt	Steel 8.8	Stainless steel A2-70
11	Plug	AISI 316L / 1.4404	AISI 316L / 1.4404
12	*** Washer	Copper	Copper

* Available spare parts; ** AISI 316 / 1.4401 on request (only available with metal to metal sealing); *** Not applicable in NPT version.

We reserve the right to change the design and material of this product without notice.

FLOW DIRECTION

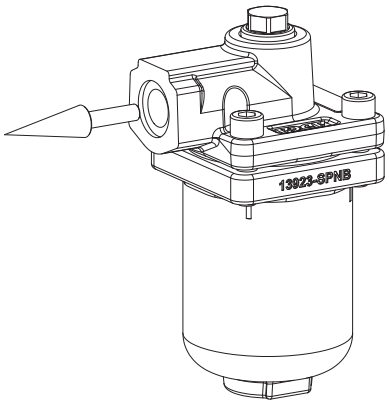

VF – Vertical inlet / straight front outlet

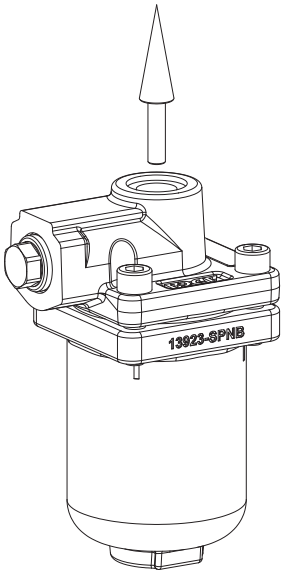

VT – Vertical from bottom to top

ORDERING CODES AE50										
MODEL	**AE50**	**6**	**M**	**XX**	**VF**	**B**	**15**	**A**	**15**	
AE50S – Carbon steel	**AE50S**									
AE50i – Stainless steel	**AE50i**									
MAXIMUM ALLOWABLE DIFFERENTIAL PRESSURE (ΔPMX)										
30 bar		**6**								
VALVE SEALING										
Metal to metal			**M**							
EPDM			**E**							
FPM			**V**							
OPTIONS										
None				**XX**						
FLOW DIRECTION										
Vertical inlet / straight front outlet					**VF**					
Vertical from bottom to top					**VT**					
OUTLET PIPE CONNECTIONS										
Female threaded ISO 228						**B**				
Female threaded NPT						**C**				
OUTLET SIZE										
1/2"							**15**			
INLET PIPE CONNECTIONS										
Female threaded ISO 7 Rp								**A**		
Female threaded NPT								**C**		
Flanged EN 1092-1 PN 40								**N**		
Flanged ASME B16.5 Class 150								**U**		
Flanged ASME B16.5 Class 300								**V**		
INLET SIZE										
1/2" or DN 15									**15**	
3/4" or DN 20									**20**	
1" or DN 25									**25**	
SPECIAL CONSTRUCTION / ADDITIONAL OPTIONS										
A full description must to be provided and validated in case of a non-standard construction										**E**

We reserve the right to change the design and material of this product without notice.