AIR AND GAS FLOAT TRAPS
FA21.1
(SG iron ; 1/2" to 1" – DN 15 to DN 25)

DESCRIPTION

The ADCA FA21.1 is a series of fully automatic ball float traps specially designed for condensate drainage in compressed air and gas systems.
Typical applications include aftercoolers, separators and compressed air mains.

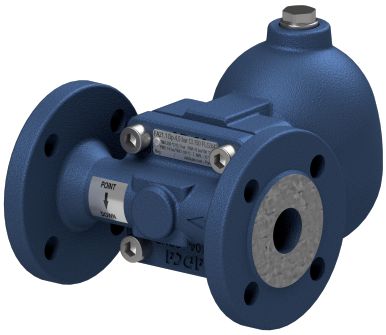

MAIN FEATURES

Modulating discharge.
Unaffected by sudden or wide load and pressure variations.
Flow direction can be easily changed by repositioning the body in relation to the mechanism and cover.



OPTIONS:	Metal to metal sealing. Equalizing (vent) and drain connections. BDV – Blowdown valve. AFZ – Anti-freeze device. FLL – Float lifting lever.
USE:	Compressed air and other non corrosive gases compatible with the construction.
AVAILABLE MODELS:	FA21.1-4,5, FA21.1-10 and FA21.1-14 – SG iron.
SIZES:	1/2" to 1"; DN 15 to DN 25.
CONNECTIONS:	Female threaded ISO 7 Rp or NPT. Flanged EN 1092-1/-2 PN 16. Flanged ASME B16.42/B16.5 Class 150.
INSTALLATION:	Inline horizontal or vertical installation. Angled horizontal or vertical installation. See IMI – Installation and maintenance instructions.
ΔPMX:	FA21.1-4,5 – 4,5 bar FA21.1-10 – 10 bar FA21.1-14 – 14 bar



CE MARKING – GROUP 2 (PED – EUROPEAN DIRECTIVE)	
PN 16	**CATEGORY**
1/2" to 1" – DN 15 to 25	SEP

BODY LIMITING CONDITIONS		
FLANGED PN 16 *	**FLANGED CLASS 150 ****	**RELATED TEMPERATURE**
ALLOWABLE PRESSURE	**ALLOWABLE PRESSURE**	
16 bar	16 bar	100 ºC
15,5 bar	14,8 bar	150 ºC
14,7 bar	13,9 bar	200 ºC
13,9 bar	12,1 bar	250 ºC

PMO – Maximum operating pressure: 14 bar; TMO – Maximum operating temperature: FPM valve sealing: 200 ºC.
Metal to metal sealing: 250 ºC; Minimum liquid specific weight: 0,75 kg/dm³.
* According to EN 1092-2:2018; ** According to ASME B16.42.

We reserve the right to change the design and material of this product without notice.

FLOW RATE CAPACITY (kg/h)										
MODEL	SIZE	DIFFERENTIAL PRESSURE (bar)								
		0,5	1	1,5	2	4,5	7	10	12	14
FA21.1-4,5	1/2" to 1" – DN 15 to 25	455	644	788	910	1366	–	–	–	–
FA21.1-10	1/2" to 1" – DN 15 to 25	285	403	494	570	856	1068	1276	–	–
FA21.1-14	1/2" to 1" – DN 15 to 25	215	304	372	430	645	805	962	1054	1139

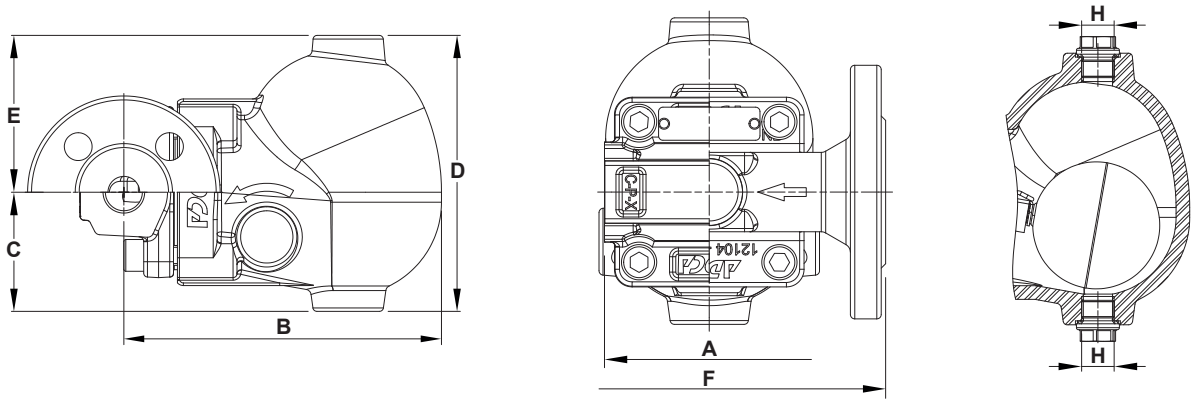

Inline design

DIMENSIONS – INLINE DESIGN (mm)											
SIZE	THREADED							PN 16		CLASS 150	
	A	B	C	D	E	H *	WEIGHT (kg)	F	WEIGHT (kg)	F	WEIGHT (kg)
1/2" – DN 15	95	160	60	139	79	3/8"	4,9	150	6,2	150	5,8
3/4" – DN 20	95	160	60	139	79	3/8"	4,8	150	6,7	150	6,1
1" – DN 25	95	160	60	139	79	3/8"	4,7	160	7,4	160	7,2

* As standard, in versions with EN flanges or female ISO 7 Rp threads, these connections are female threaded ISO 228. In versions with ASME flanges or female NPT threads, these connections are female threaded NPT.

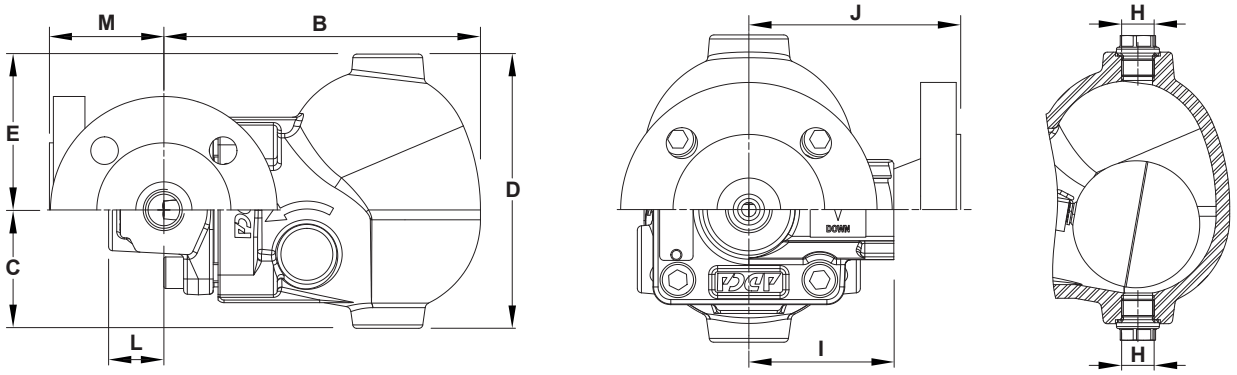

Angled design

DIMENSIONS – ANGLED DESIGN (mm)													
SIZE	THREADED								PN 16			CLASS 150		
	B	C	D	E	H *	I	L	WEIGHT (kg)	J	M	WEIGHT (kg)	J	M	WEIGHT (kg)
1/2" – DN 15	160	60	139	79	3/8"	65	28	4,9	95	58	6,5	100	63	6
3/4" – DN 20	160	60	139	79	3/8"	65	28	4,9	95	58	7	100	63	6,4
1" – DN 25	160	60	139	79	3/8"	65	28	4,9	95	58	7,5	100	63	6,9

* As standard, in versions with EN flanges or female ISO 7 Rp threads, these connections are female threaded ISO 228. In versions with ASME flanges or female NPT threads, these connections are female threaded NPT.

We reserve the right to change the design and material of this product without notice.

MATERIALS

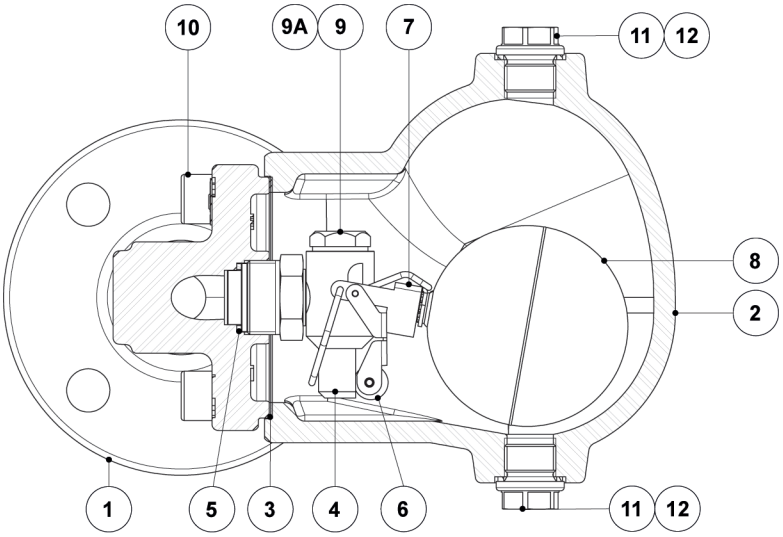

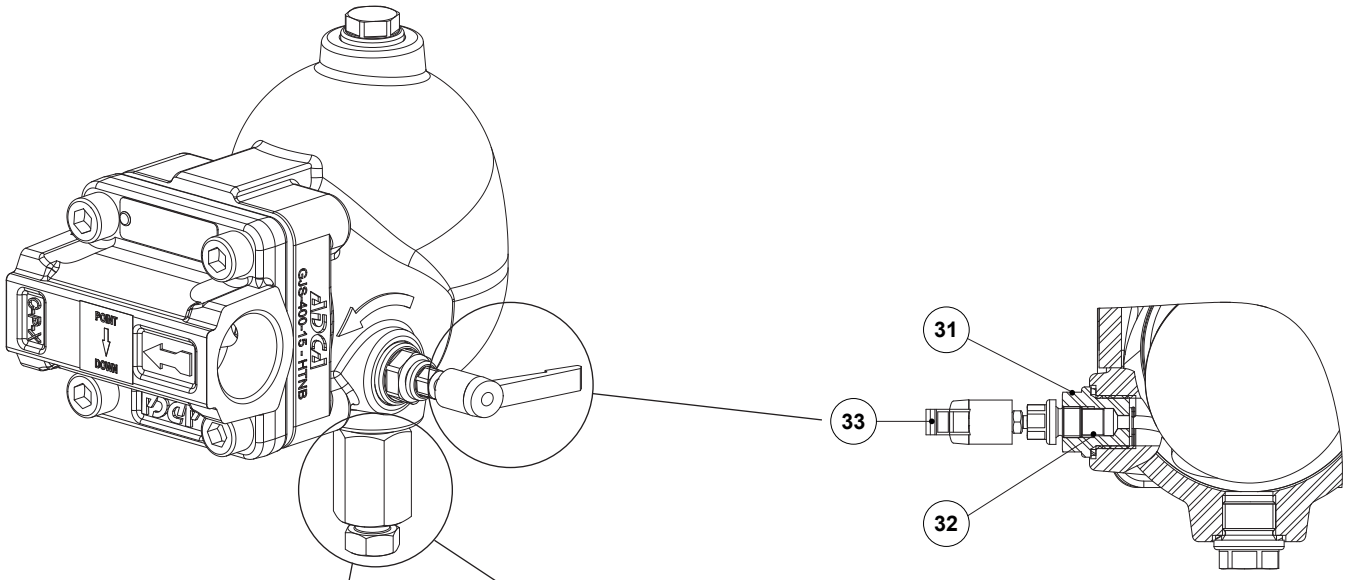

Optional float lifting lever (FLL)

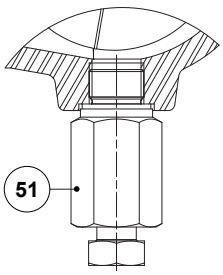

Optional blowdown valve (BDV); Manual

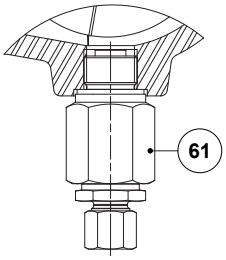

Optional anti-freeze device (AFZ); Automatic

We reserve the right to change the design and material of this product without notice.

MATERIALS		
POS. No.	**DESIGNATION**	**MATERIAL**
1	Body (inline flanged)	GJS-400-15 / 0.7040
	Body (inline threaded)	P250GH / 1.0460
	Body (angled)	P250GH / 1.0460
2	Cover	GJS-400-15 / 0.7040
3	* Gasket	Stainless steel / Graphite
4	* Seat	AISI 303 / 1.4305
5	* Gasket	Copper
6	* Valve ball	AISI 316 / 1.4401; FPM
7	* Lever	AISI 304 / 1.4301
8	* Float	AISI 304 / 1.4301
9	Plug	AISI 316L / 1.4404
9A	Gasket	Copper
10	Bolt	Zinc plated steel
11	Plug	AISI 316L / 1.4404
12	** Gasket	Copper; AISI 304 / 1.4301
31	Lever mechanism	AISI 303 / 1.4305; AISI 304 / 1.4301; AISI 316L / 1.4404
32	Packing	Graphite
33	Lever	Plastic
51	Blowdown valve	AISI 303 / 1.4305; AISI 316L / 1.4404
61	Anti-freeze device	AISI 303 / 1.4305; AISI 316L / 1.4404

* Available spare parts; ** Not applicable in NPT version.

FLOW DIRECTION

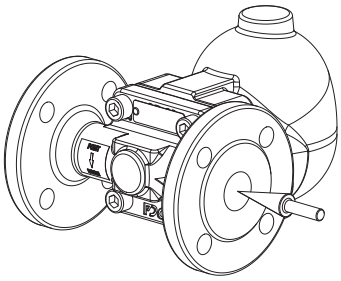

IR – Horizontal from right to left

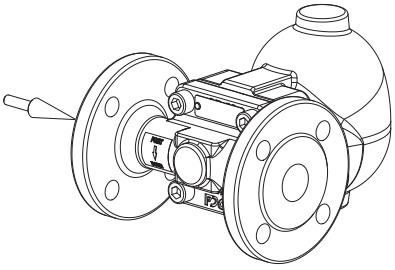

IL – Horizontal from left to right

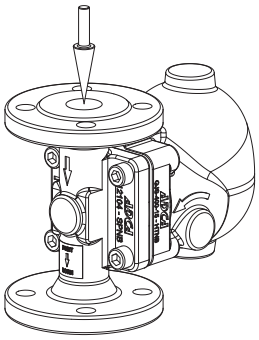

IT – Vertical from top to bottom

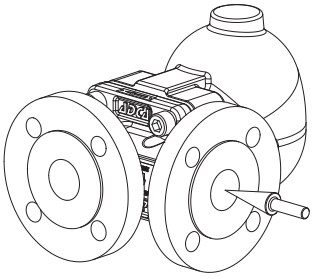

AR – Angled from right to front

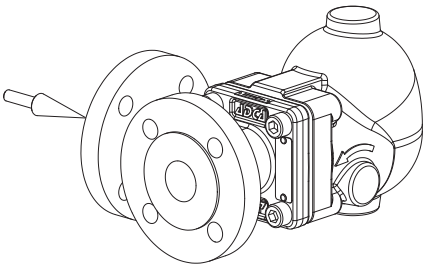

AL – Angled from left to front

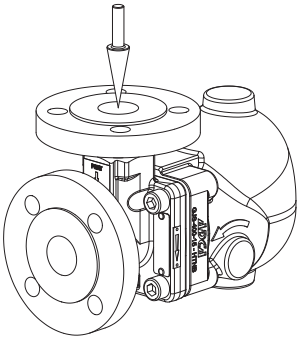

AT – Angled from top to front

We reserve the right to change the design and material of this product without notice.

ORDERING CODES FA21.1									
MODEL	**FA211**	**2**	**V**	**XX**	**X**	**IR**	**A**	**15**	
FA21.1 – GJS-400-15 / 0.7040 SG iron	**FA211**								
MAXIMUM ALLOWABLE DIFFERENTIAL PRESSURE (ΔPMX)									
4,5 bar		**2**							
10 bar		**3**							
14 bar		**4**							
VALVE SEALING									
FPM (standard)			**V**						
Metal to metal			**M**						
COVER CONNECTIONS									
None				**XX**					
3/8" threaded connections on top and bottom, closed with plugs (mandatory if any options are considered)				**10**					
OPTIONS									
If any, these have specific separate ordering codes, please refer to the appropriate documentation									
FLL – FLOAT LIFTING LEVER									
None					**X**				
Lifting lever on the right side (when facing the steam trap body)					**R**				
Lifting lever on the left side (when facing the steam trap body)					**L**				
FLOW DIRECTION									
Inline horizontal from right to left (standard)						**IR**			
Inline horizontal from left to right						**IL**			
Inline vertical from top to bottom						**IT**			
Angled from right to front						**AR**			
Angled from left to front						**AL**			
Angled from top to front						**AT**			
PIPE CONNECTIONS									
Female threaded ISO 7 Rp							**A**		
Female threaded NPT							**C**		
Flanged EN 1092-1/-2 PN 16							**L**		
Flanged ASME B16.42/B16.5 Class 150							**U**		
SIZE									
1/2" or DN 15								**15**	
3/4" or DN 20								**20**	
1" or DN 25								**25**	
SPECIAL CONSTRUCTION / ADDITIONAL OPTIONS									
A full description must to be provided and validated in case of a non-standard construction									**E**

We reserve the right to change the design and material of this product without notice.