AUTOMATIC AIR AND GAS VENTS FOR LIQUID SYSTEMS
AE39.2
(Carbon steel ; 21/2" x 11/2" and 3" x 11/2" – DN 65 x 40 and DN 80 x 40)

DESCRIPTION

The ADCA AE39.2 is a series of high capacity automatic vents designed to remove air or gases from water and other liquid systems, without requiring any external source of energy.
They are capable of handling high loads during start-up while still being able to discharge smaller loads in continuous modulating operation with one single orifice.
These ball float type vents are manufactured in carbon steel, available with various soft sealing options, and can be used in combination with other air elimination and separation systems or directly applied at high points in the pipelines.



MAIN FEATURES

Suitable for start-up and continuous operation with one single orifice.
High capacity.
Allow fast and easy inline maintenance.
Corrosion resistant internal parts.
No balancing pipe required.



OPTIONS: Various soft sealing options.

USE: Cold, hot and superheated water or other liquids compatible with the construction.

AVAILABLE MODELS: AE39.2-5, AE39.2-10, AE39.2-20, AE39.2-28 and AE39.2-32 – carbon steel.

SIZES: 21/2" x 11/2" and 3" x 11/2";
DN 65 x 40 and DN 80 x 40.

CONNECTIONS: Female threaded ISO 7 Rp or NPT.
Flanged EN 1092-1 PN 40.
Flanged ASME B16.5 Class 150 or 300.
Socket weld (SW) ASME B16.11.



INSTALLATION: Inline vertical installation.
It must be installed absolutely vertically at the points in the plant where the air tends to collect.
See IMI – Installation and maintenance instructions.

ΔPMX: AE39.2-5 – 5 bar
AE39.2-10 – 10 bar
AE39.2-20 – 20 bar
AE39.2-28 – 28 bar
AE39.2-32 – 32 bar

CE MARKING – GROUP 2 (PED – EUROPEAN DIRECTIVE)		
PN 16	**PN 40**	**CATEGORY**
All sizes	–	1 (CE marked)
–	All sizes	2 (CE marked)

We reserve the right to change the design and material of this product without notice.

BODY LIMITING CONDITIONS			
FLANGED / PN 16	FLANGED / PN 40 / CLASS 300 *	FLANGED / CLASS 150 **	RELATED TEMPERATURE
ALLOWABLE PRESSURE	ALLOWABLE PRESSURE	ALLOWABLE PRESSURE	
16 bar	40 bar	19,3 bar	50 ºC
14,8 bar	37,1 bar	17,7 bar	100 ºC
13,3 bar	33,3 bar	14 bar	200 ºC
12,1 bar	30,4 bar	12,1 bar	250 ºC
11 bar	27,6 bar	10,2 bar	300 ºC

PMO – Maximum operating pressure: 32 bar.
TMO – Maximum operating temperature: EPDM valve sealing: 130ºC; FPM valve sealing: 200ºC.
Minimum liquid specific weight: 0,75 kg/dm³.
* According to EN 1092-1:2018; ** According to EN 1759-1:2004.
Body limiting conditions PN 40 or below, depending on the type of connection adopted.

FLOW RATE CAPACITY (NL/min)														
MODEL	SIZE	DIFFERENTIAL PRESSURE (bar)												
		0,1	0,5	1	3	5	7	10	12	16	20	24	28	32
AE39.2-5	21/2" x 11/2" – DN 65 x 40 3" x 11/2" – DN 80 x 40	661	1446	1806	3522	5277	–	–	–	–	–	–	–	–
AE39.2-10	21/2" x 11/2" – DN 65 x 40 3" x 11/2" – DN 80 x 40	342	749	936	1825	2735	3645	5010	–	–	–	–	–	–
AE39.2-20	21/2" x 11/2" – DN 65 x 40 3" x 11/2" – DN 80 x 40	132	289	362	706	1059	1410	1939	2292	2996	3700	–	–	–
AE39.2-28	21/2" x 11/2" – DN 65 x 40 3" x 11/2" – DN 80 x 40	67	155	231	480	720	960	1319	1559	2038	2517	2247	2607	–
AE39.2-32	21/2" x 11/2" – DN 65 x 40 3" x 11/2" – DN 80 x 40	51	113	141	276	413	551	757	894	1170	1445	1720	1995	2271

Values shown refer to capacities of air discharge at 15 ºC, under atmospheric pressure (1013 mbar).
If the air temperature differs from 15 ºC, the discharge capacity can be corrected by multiplying it by: $\frac{288}{273 + T}$, where T is the actual temperature in ºC.
It may be assumed that the temperature of the air is equal to the temperature of the water.

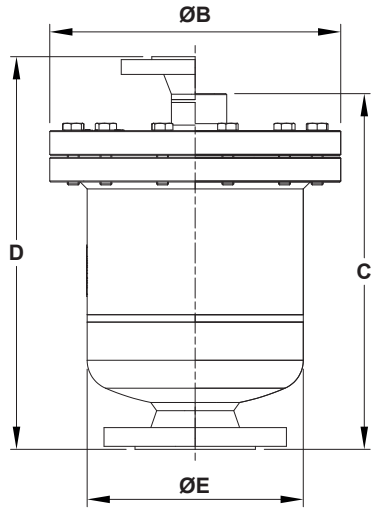

DIMENSIONS (mm)																
INLET *	PN 16				PN 40		PN 40		PN 16		PN 40		CLASS 150		CLASS 300	
OUTLET *	THREADED				THREADED		SW		PN 16		PN 40		CLASS 150		CLASS 300	
SIZE	ØB	C	ØE	WGT. (kg)	C	WGT. (kg)	C	WGT. (kg)	D	WGT. (kg)	D	WGT. (kg)	D	WGT. (kg)	D	WGT. (kg)
21/2" x 11/2" DN 65 x 40	295	358	219	35,8	360	36,3	365	36,4	391	37,4	398	38	401	38,1	413	40,5
3" x 11/2" DN 80 x 40	295	350	219	35,5	353	36,2	358	36,4	383	37,1	391	37,9	388	37,8	403	41,3

* For other combinations certified dimensions, consult the manufacturer.

We reserve the right to change the design and material of this product without notice.

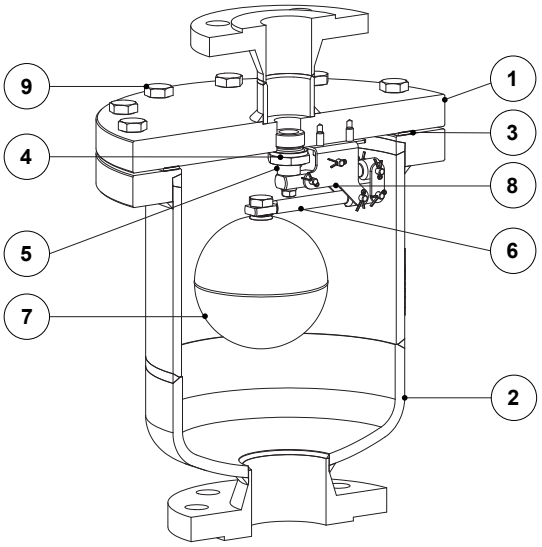

MATERIALS		
POS. No.	**DESIGNATION**	**MATERIAL**
1	Body	S355JR / 1.0045; P250GH / 1.0460; A105 / 1.0432
2	Cover	S355JR / 1.0045; P235GH / 1.0345; P265GH / 1.0425; P250GH / 1.0460; A105 / 1.0432
3	* Gasket	Stainless steel / Graphite
4	* Seat	AISI 316L / 1.4404
5	Plug	FPM or EPDM
6	* Lever	AISI 316 / 1.4401; AISI 316L / 1.4404
7	* Float	AISI 304 / 1.4301
8	* Mechanism support bracket	AISI 304 / 1.4301
9	Bolt	Steel 8.8

* Available spare parts.

FLOW DIRECTION

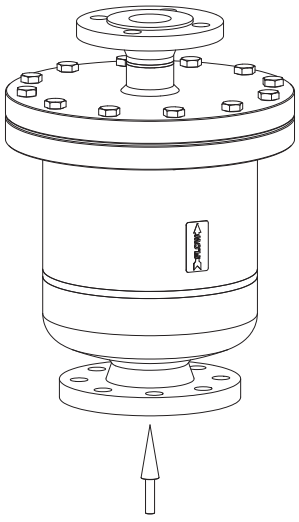

VT – Vertical from bottom to top

We reserve the right to change the design and material of this product without notice.

ORDERING CODES AE39.2										
MODEL	**AE392**	**2**	**E**	**XX**	**VT**	**A**	**40**	**L**	**65**	
AE39.2 – Carbon steel	**AE392**									
MAXIMUM ALLOWABLE DIFFERENTIAL PRESSURE (ΔPMX)										
5 bar		**2**								
10 bar		**3**								
20 bar		**5**								
28 bar		**6**								
32 bar		**7**								
VALVE SEALING										
EPDM			**E**							
FPM			**V**							
COVER CONNECTIONS										
None				**XX**						
OPTIONS										
If any, these have specific separate ordering codes, please refer to the appropriate documentation										
FLOW DIRECTION										
Inline vertical from bottom to top					**VT**					
OUTLET PIPE CONNECTION										
Female threaded ISO 7 Rp						**A**				
Female threaded NPT						**C**				
Socket weld (SW) ASME 16.11						**H**				
Flanged EN 1092-1 PN 16						**L**				
Flanged EN 1092-1 PN 40						**N**				
Flanged ASME B16.5 Class 150						**U**				
Flanged ASME B16.5 Class 300						**V**				
OUTLET SIZE										
11/2" or DN 40							**40**			
INLET PIPE CONNECTION										
Flanged EN 1092-1 PN 16								**L**		
Flanged EN 1092-1 PN 40								**N**		
Flanged ASME B16.5 Class 150								**U**		
Flanged ASME B16.5 Class 300								**V**		
INLET SIZE										
21/2" or DN 65									**65**	
3" or DN 80									**80**	
SPECIAL CONSTRUCTION / ADDITIONAL OPTIONS										
A full description must to be provided and validated in case of a non-standard construction										**E**

We reserve the right to change the design and material of this product without notice.