FLOAT AND THERMOSTATIC STEAM TRAPS
FLT41
(Stainless steel ; 1/2" to 1" – DN 15 to DN 25)

DESCRIPTION

The ADCA FLT41 is a series of float and thermostatic steam traps with integral air vent designed for modulating discharge of condensate, ensuring maximum system heat transfer.
Typical applications include unit heaters, heat exchangers, dryers, jacketed vessels and other applications where continuous discharge is essential.





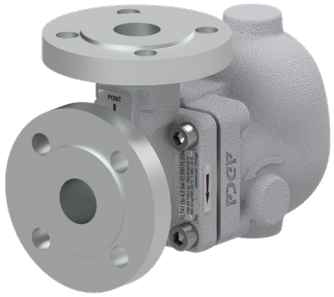

MAIN FEATURES

Modulating discharge of condensate at steam temperature.
Unaffected by sudden or wide load and pressure variations.
No backing-up with condensate.
Excellent air discharge through its integrated air vent.
Flow direction can be easily changed by repositioning the body in relation to the mechanism and cover.

OPTIONS: Equalizing (vent) and drain connections.
SLR – Steam lock release.
HVV – Hand vent valve.
BDV – Blowdown valve.
AFZ – Anti-freeze device.
FLL – Float lifting lever.
VB21M – Vacuum breaker.

USE: Saturated and superheated steam.

AVAILABLE MODELS: FLT41-4,5, FLT41-10, FLT41-14, FLT41-21 and FLT41-32 – stainless steel.

SIZES: 1/2" to 1"; DN 15 to DN 25.

CONNECTIONS: Female threaded ISO 7 Rp or NPT.
Flanged EN 1092-1 PN 40.
Flanged ASME B16.5 Class 150 or 300.
Socket weld (SW) ASME B16.11.

INSTALLATION: Inline horizontal or vertical installation.
Angled horizontal or vertical installation.
See IMI – Installation and maintenance instructions.

ΔPMX: FLT41-4,5 – 4,5 bar
FLT41-10 – 10 bar
FLT41-14 – 14 bar
FLT41-21 – 21 bar
FLT41-32 – 32 bar

CE MARKING – GROUP 2 (PED – EUROPEAN DIRECTIVE)	
PN 40	**CATEGORY**
1/2" to 1" – DN 15 to 25	SEP

BODY LIMITING CONDITIONS

FLANGED PN 40 *	FLANGED CLASS 300 **	FLANGED CLASS 150 **	RELAT. TEMP.
ALL. PRESS.	ALL. PRESS.	ALL. PRESS.	
37,9 bar	34,4 bar	13,3 bar	100 ºC
31,8 bar	28,8 bar	11,1 bar	200 ºC
29,9 bar	26,6 bar	10,2 bar	250 ºC
27,6 bar	25,2 bar	9,7 bar	300 ºC

PMO – Maximum operating pressure: 32 bar.
TMO – Maximum operating temperature: 250 ºC.
* Acc. to EN 1092-1:2018; ** Acc. to EN 1759-1:2004.
Body limiting conditions PN 40 or below, depending on the type of connection adopted. Rating PN 40 for threaded and SW versions.

We reserve the right to change the design and material of this product without notice.

FLOW RATE CAPACITY (kg/h)														
MODEL	SIZE	DIFFERENTIAL PRESSURE (bar)												
		0,5	1	1,5	2	4,5	7	10	12	14	16	21	25	32
FLT41-4,5	1/2" to 1" – DN 15 to 25	305	395	455	500	680	–	–	–	–	–	–	–	–
FLT41-10	1/2" to 1" – DN 15 to 25	235	330	400	440	630	694	705	–	–	–	–	–	–
FLT41-14	1/2" to 1" – DN 15 to 25	220	277	318	365	481	556	654	691	710	–	–	–	–
FLT41-21	1/2" to 1" – DN 15 to 25	148	205	228	255	353	418	485	530	560	595	635	–	–
FLT41-32	1/2" to 1" – DN 15 to 25	72	97	123	155	208	252	323	385	393	410	440	550	595

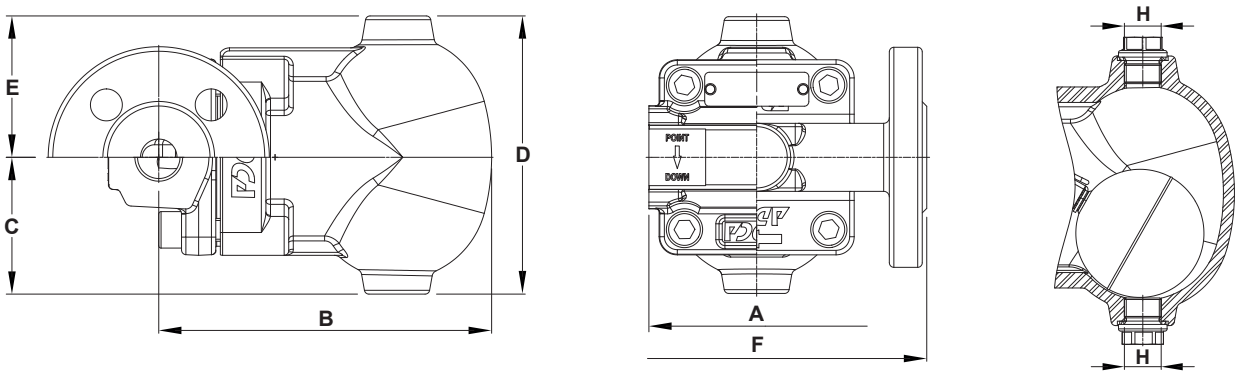

Inline design

DIMENSIONS – INLINE DESIGN (mm)													
SIZE	THREADED / SW							PN 40		CLASS 150		CLASS 300	
	A	B	C	D	E	H *	WGT. (kg)	F	WGT. (kg)	F	WGT. (kg)	F	WGT. (kg)
1/2" – DN 15	95	160	60	139	79	3/8"	4,9	150	6,2	150	5,8	150	6,1
3/4" – DN 20	95	160	60	139	79	3/8"	4,8	150	6,7	150	6,1	150	7,2
1" – DN 25	95	160	60	139	79	3/8"	4,7	160	7,4	160	7,2	160	7,9

* As standard, in versions with EN flanges or female ISO 7 Rp threads, these connections are female threaded ISO 228. In versions with ASME flanges, female NPT threads or SW, these connections are female threaded NPT.

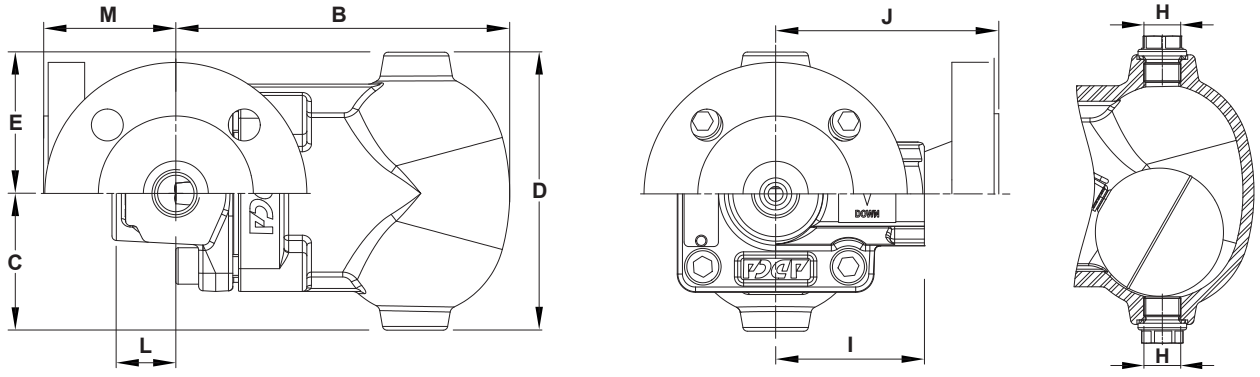

Angled design

DIMENSIONS – ANGLED DESIGN (mm)																	
SIZE	THREADED / SW								PN 40			CLASS 150			CLASS 300		
	B	C	D	E	H *	I	L	WGT. (kg)	J	M	WGT. (kg)	J	M	WGT. (kg)	J	M	WGT. (kg)
1/2" – DN 15	160	60	139	79	3/8"	65	28	4,8	95	58	6,5	100	63	6	105	68	6,5
3/4" – DN 20	160	60	139	79	3/8"	65	28	4,8	95	58	7	100	63	6,4	110	73	7,5
1" – DN 25	160	60	139	79	3/8"	65	28	4,8	95	58	7,5	100	63	6,9	110	73	8

* As standard, in versions with EN flanges or female ISO 7 Rp threads, these connections are female threaded ISO 228. In versions with ASME flanges, female NPT threads or SW, these connections are female threaded NPT.

MATERIALS

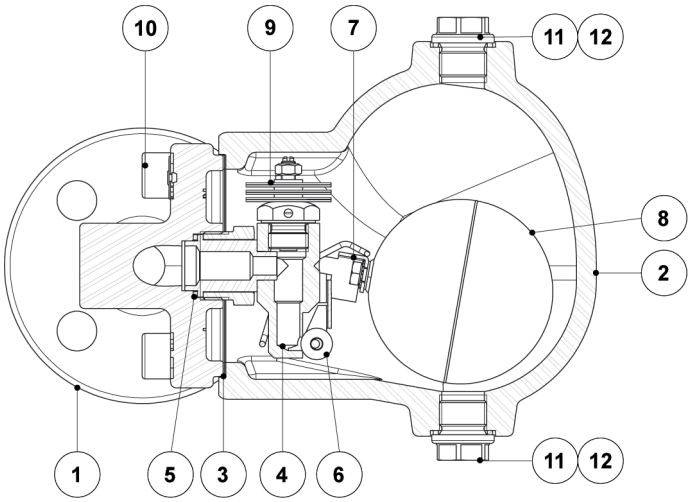

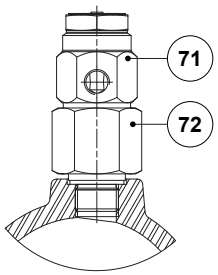

Optional vacuum breaker (VB21M)

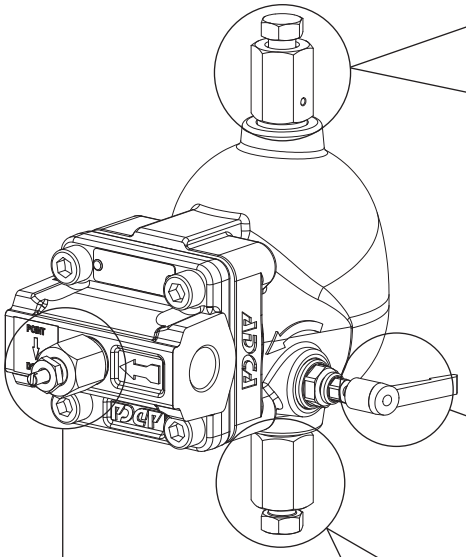

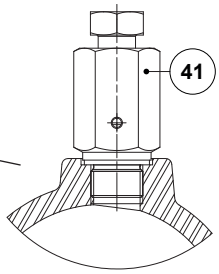

Optional hand vent valve (HVV)

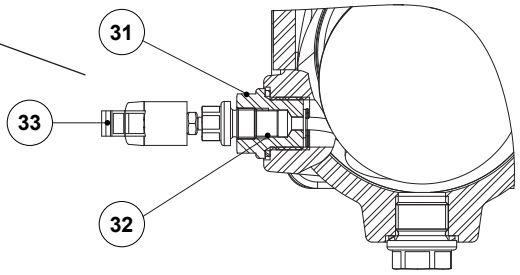

Optional float lifting lever (FLL)

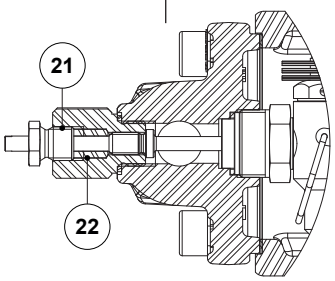

Optional steam lock release (SLR)

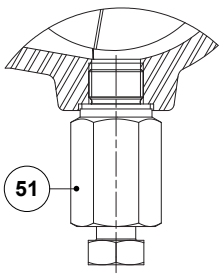

Optional blowdown valve (BDV); Manual

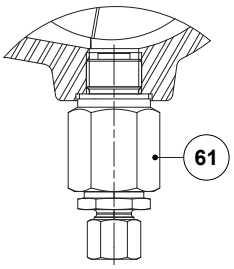

Optional anti-freeze device (AFZ); Automatic

We reserve the right to change the design and material of this product without notice.

MATERIALS		
POS. No.	**DESIGNATION**	**MATERIAL**
1	Body (inline flanged)	A351 CF8M / 1.4408
	Body (inline threaded)	AISI 316L / 1.4404
	Body (angled)	AISI 316L / 1.4404
2	Cover	A351 CF8M / 1.4408
3	* Gasket	Stainless steel / Graphite
4	* Seat	AISI 303 / 1.4305
5	* Gasket	Copper
6	* Valve ball	AISI 316 / 1.4401
7	* Lever	AISI 304 / 1.4301
8	* Float	AISI 304 / 1.4301
9	* Automatic air vent	Stainless steel; Bimetallic
10	Bolt	Stainless steel A2-70
11	Plug	AISI 316L / 1.4404
12	** Gasket	Copper; AISI 304 / 1.4301
21	Steam lock release	AISI 420 / 1.4021; AISI 316L / 1.4404
22	Packing	Graphite
31	Lever mechanism	AISI 303 / 1.4305; AISI 304 / 1.4301; AISI 316L / 1.4404
32	Packing	Graphite
33	Lever	Plastic
41	Hand vent valve	AISI 303 / 1.4305; AISI 316L / 1.4404
51	Blowdown valve	AISI 303 / 1.4305; AISI 316L / 1.4404
61	Anti-freeze device	AISI 303 / 1.4305; AISI 316L / 1.4404
71	Vacuum breaker	AISI 303 / 1.4305
72	Connector	AISI 316L / 1.4404

* Available spare parts; ** Not applicable in NPT version.

FLOW DIRECTION

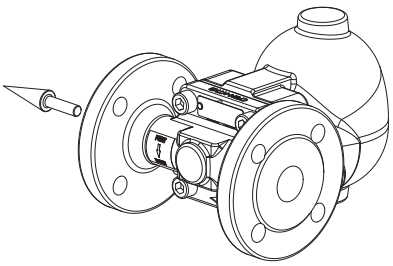

IR – Horizontal from right to left

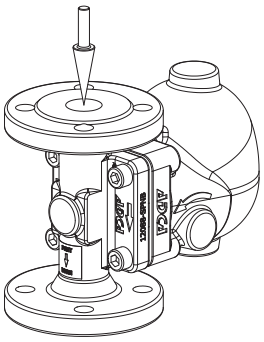

IT – Vertical from top to bottom

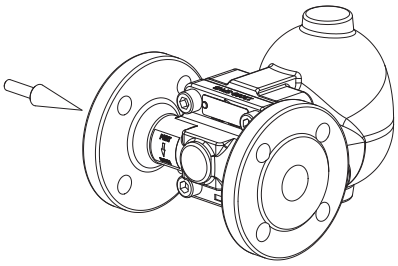

IL – Horizontal from left to right

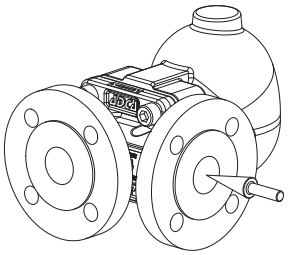

AR – Angled from right to front

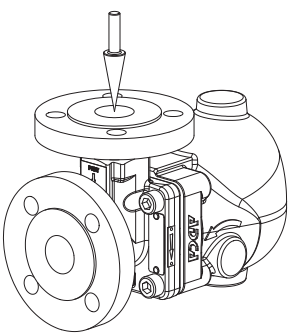

AT – Angled from top to front

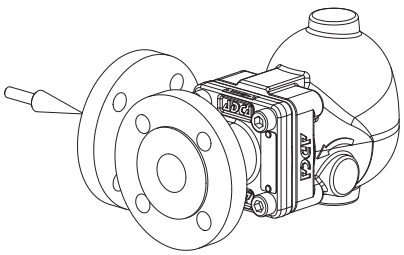

AL – Angled from left to front

We reserve the right to change the design and material of this product without notice.

ORDERING CODES FLT41

MODEL	A41	2	V	XX	X	X	IR	A	15	
FLT41 – Stainless steel	**A41**									
MAXIMUM ALLOWABLE DIFFERENTIAL PRESSURE (ΔPMX)										
4,5 bar		**2**								
10 bar		**3**								
14 bar		**4**								
21 bar		**5**								
32 bar		**7**								
AUTOMATIC AIR VENT										
Bimetallic air vent (standard)			**V**							
None			**X**							
COVER CONNECTIONS										
None				**XX**						
3/8" threaded connections on top and bottom, closed with plugs (mandatory if any options are considered)				**10**						
OPTIONS										
If any, these have specific separate ordering codes, please refer to the appropriate documentation										
SLR – STEAM LOCK RELEASE										
None					**X**					
With steam lock release assembled					**S**					
FLL – FLOAT LIFTING LEVER										
None						**X**				
Lifting lever on the right side (when facing the steam trap body)						**R**				
Lifting lever on the left side (when facing the steam trap body)						**L**				
FLOW DIRECTION										
Inline horizontal from right to left (standard)							**IR**			
Inline horizontal from left to right							**IL**			
Inline vertical from top to bottom							**IT**			
Angled from right to front							**AR**			
Angled from left to front							**AL**			
Angled from top to front							**AT**			
PIPE CONNECTIONS										
Female threaded ISO 7 Rp								**A**		
Female threaded NPT								**C**		
Socket weld (SW) ASME B16.11								**H**		
Flanged EN 1092-1 PN 40								**N**		
Flanged ASME B16.5 Class 150								**U**		
Flanged ASME B16.5 Class 300								**V**		
SIZE										
1/2" or DN 15									**15**	
3/4" or DN 20									**20**	
1" or DN 25									**25**	
SPECIAL CONSTRUCTION / ADDITIONAL OPTIONS										
A full description must to be provided and validated in case of a non-standard construction										**E**

We reserve the right to change the design and material of this product without notice.