DOUBLE WINDOW SIGHT GLASSES
DW40

DESCRIPTION

The ADCA DW40 is a series of double window sight glasses specially designed for installation downstream of steam traps, to monitor their performance such as checking for live steam leakage or blockage. Such devices can also be used for monitoring flow conditions in other applications, particularly in pipelines with liquid medium.



DW40S
1/2" to 1"

MAIN FEATURES

Compact.
Double window design.
Borosilicate glass.

OPTIONS: Mica shield discs for use with steam.

USE: Condensate lines and others.

AVAILABLE MODELS: DW40S – carbon steel.
DW40SS – stainless steel.

SIZES: 1/2" to 2"; DN 15 to DN 50.

CONNECTIONS: Female threaded ISO 7 Rp or NPT.
Flanged EN 1092-1 PN 40.
Flanged ASME B16.5 Class 150 or 300.

INSTALLATION: Horizontal or vertical installation.
See IMI – Installation and maintenance instructions.

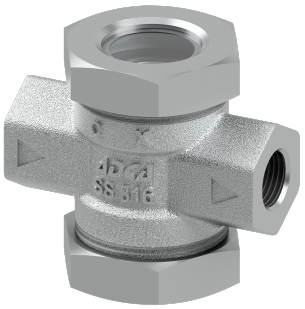

DW40SS
1/2" to 1"



DW40S and DW40SS
11/4" to 2"

CE MARKING – GROUP 2 (PED – EUROPEAN DIRECTIVE)			
PN 40 / CLASS 300	**PN 25**	**CLASS 150**	**CATEGORY**
1/2" to 1" DN 15 to 25	11/4" to 1/2" DN 32 to 40	1/2" to 2"	SEP
–	2" – DN 50	–	1 (CE Marked)

BODY LIMITING CONDITIONS

DW40S				DW40SS				
PN 40 / CLASS 300 *	**PN 25 ***	**CLASS 150 ****	**RELATED TEMP.**	**FLANGED CLASS 150 ****	**FLANGED PN 25 ***	**FLANGED CLASS 300 ****	**FLANGED PN 40 ***	**RELATED TEMP.**
ALLOWABLE PRESSURE	**ALLOWABLE PRESSURE**	**ALLOWABLE PRESSURE**		**ALLOWABLE PRESSURE**	**ALLOWABLE PRESSURE**	**ALLOWABLE PRESSURE**	**ALLOWABLE PRESSURE**	
40 bar	25 bar	19,3 bar	-10 / 50 ºC	15,3 bar	25 bar	39,9 bar	40 bar	-10 / 50 ºC
37,1 bar	23,2 bar	17,7 bar	100 ºC	13,3 bar	23,6 bar	34,4 bar	37,9 bar	100 ºC
35,2 bar	22 bar	15,8 bar	150 ºC	12 bar	21,5 bar	31,3 bar	34,4 bar	150 ºC
33,3 bar	20,8 bar	14 bar	200 ºC	11,1 bar	19,8 bar	28,8 bar	31,8 bar	200 ºC
28,7 bar	17,9 bar	11,7 bar	280 ºC	10,2 bar	18,6 bar	26,6 bar	29,9 bar	250 ºC

* According to EN 1092-1:2018; ** According to EN 1759-1:2004.
Remarks: For applications with steam, use mica shield discs.
Rating PN 40 for sizes up to DN 25; Rating PN 25 for sizes from DN 32 to DN 50; Rating PN 40 or lower for threaded versions.

We reserve the right to change the design and material of this product without notice.

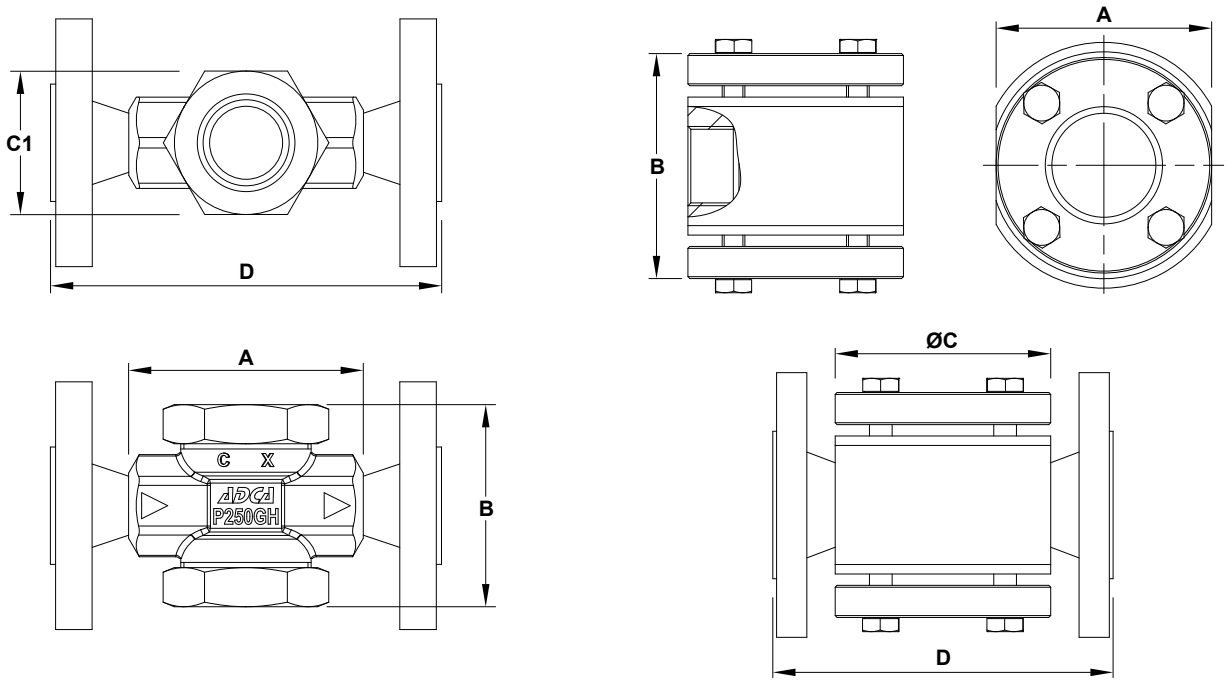

1/2" to 1" – DN 15 to 25

11/4" to 2" – DN 32 to 50

DIMENSIONS (mm)											
SIZE	THREADED					PN 40		CLASS 150		CLASS 300	
	A	B	ØC	C1	WGT. (kg)	D	WGT. (kg)	D	WGT. (kg)	D	WGT. (kg)
1/2" – DN 15	90	80	–	55	1	150	2,8	150	2,2	150	2,6
3/4" – DN 20	90	80	–	55	1	150	3,2	150	2,6	150	3,5
1" – DN 25	100	87	–	55	1,2	160	3,7	160	3,3	160	4,1
11/4" – DN 32	114	119	114	–	7,4	180	11	180	10,2	180	11,3
11/2" – DN 40	114	119	114	–	7,2	200	11,5	200	11	200	12,7
2" – DN 50	114	129	130	–	7,7	230	13,5	230	13	230	14,3

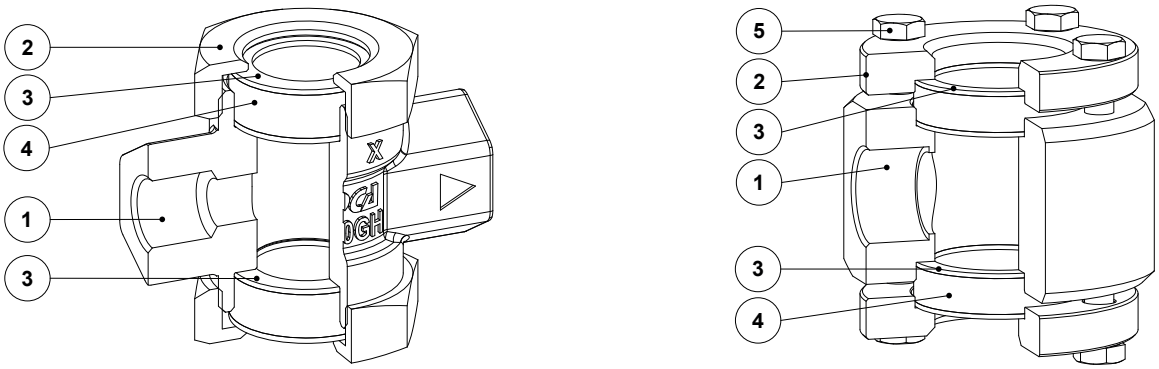

1/2" to 1" – DN 15 to 25

11/4" to 2" – DN 32 to 50

MATERIALS					
POS. No.	DESIGNATION	DW40S		DW40SS	
		1/2" to 1" – DN 15 to 25	11/4" to 2" – DN 32 to 50	1/2" to 1" – DN 15 to 25	11/4" to 2" – DN 32 to 50
1	Body	P250GH / 1.0460	S355JR / 1.0045; P250GH / 1.0460	AISI 316 / 1.4401	AISI 316L / 1.4404
2	Cover	P250GH / 1.0460	S355JR / 1.0045	AISI 316L / 1.4404	AISI 316L / 1.4404
3	* Gasket	Stainless steel / Graphite	Stainless steel / Graphite	Stainless steel / Graphite	Stainless steel / Graphite
4	* Glass window	Borosilicate glass	Borosilicate glass	Borosilicate glass	Borosilicate glass
5	Bolt	–	Steel 8.8	–	Stainless steel A2-70

* Available spare parts.

We reserve the right to change the design and material of this product without notice.