Y STRAINERS
IS116

DESCRIPTION

The ADCA IS116 forged steel Y strainers are applicable to all types of steam, water, oil and air systems.
Their purpose is to protect traps, regulating valves, piping, etc. from dirt and impurities, which are often the cause of damage and consequent energy loss of fluid systems.





MAIN FEATURES

Strainer cap with drain plug.

OPTIONS: Various screen aperture sizes.
Blowdown valves.

USE: Saturated steam, water, oil, air and other fluids compatible with the construction materials.

AVAILABLE MODELS: IS116 – forged steel.

SIZES: 1/2" to 2"; DN 15 to DN 50.

SCREENS: 1 mm aperture (standard).
0,45 mm aperture.
1,5 mm aperture.
Others on request.

CONNECTIONS: Female threaded ISO 7 Rp or NPT.
Flanged EN 1092-1 PN 40, PN 63 or PN 100.
Flanged ASME B16.5 Class 150, 300 or 600.
Socket weld (SW) ASME 16.11.

INSTALLATION: Horizontal or vertical downwards installation.
See IMI – Installation and maintenance instructions.

CE MARKING – GROUP 2 (PED – EUROPEAN DIRECTIVE)		
CLASS 150	**PN 40 – PN 100 CL. 300 – CL. 800**	**CATEGORY**
1/2" to 2"	1/2" to 11/4" DN 15 to 32	SEP
–	11/2" and 2" DN 40 and 50	1 (CE marked)

BODY LIMITING CONDITIONS

FLANGED PN 40 *	FLANGED PN 63 *	FLANGED PN 100 *	RELATED TEMP.	FLANGED CLASS 150 **	FLANGED CLASS 300 **	FLANGED CLASS 600 **	THREADED / SW CLASS 800 ***	RELATED TEMP.
ALLOWABLE PRESSURE	ALLOWABLE PRESSURE	ALLOWABLE PRESSURE		ALLOWABLE PRESSURE	ALLOWABLE PRESSURE	ALLOWABLE PRESSURE	ALLOWABLE PRESSURE	
40 bar	63 bar	100 bar	-10 / 50 ºC	19,7 bar	51 bar	102 bar	136,2 bar	-29 / 38 ºC
40 bar	63 bar	100 bar	50 ºC	19,3 bar	50 bar	100,1 bar	133,7 bar	50 ºC
27,6 bar	43,5 bar	69 bar	300 ºC	10,2 bar	38,9 bar	77,5 bar	106,2 bar	300 ºC
25,7 bar	40,5 bar	64,2 bar	350 ºC	8,4 bar	36,9 bar	74 bar	100,2 bar	350 ºC
18,5 bar	46,2 bar	29,1 bar	425 ºC	5,6 bar	28,7 bar	57,7 bar	76,7 bar	425 ºC

PMO – Maximum operating pressure: 136 bar.
TMO – Maximum operating temperature: 425 ºC.
* According to EN 1092-1; ** According to EN 1759-1; *** According to API 602.
Body limiting conditions Class 800 or below, depending on the type of connection adopted.

We reserve the right to change the design and material of this product without notice.

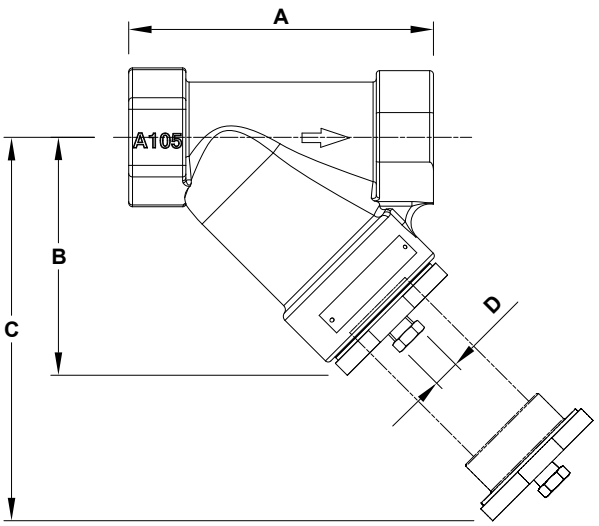

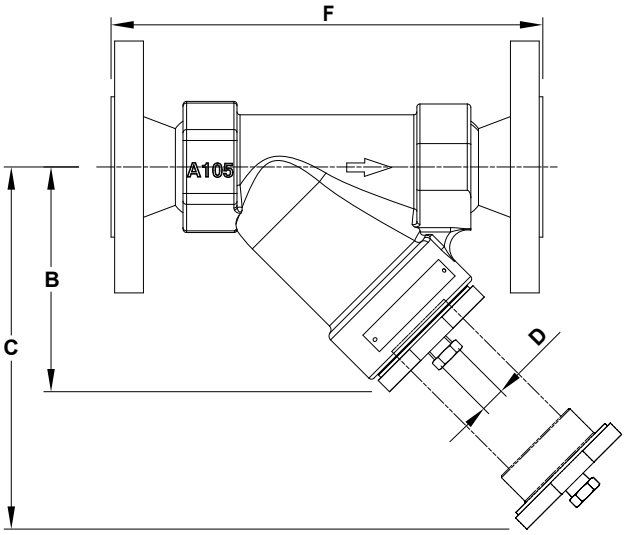

DIMENSIONS (mm)											
SIZE	THREADED / SW					PN 40		PN 63 / PN 100 *	CLASS 150 *	CLASS 300 *	CLASS 600 *
	A	B	C	D **	WGT. (kg)	F	WGT. (kg)	F	F	F	F
1/2" – DN 15	90	60	105	1/4"	1	150	2,6	165	165	165	165
3/4"– DN 20	110	75	140	1/4"	1,2	170	3,5	185	191	191	191
1" – DN 25	130	93	155	1/4"	2	200	4,6	230	216	216	216
11/4" – DN 32	160	120	195	1/4"	4,5	240	8,3	270	260	270	280
11/2" – DN 40	160	120	195	1/4"	4,5	240	9,5	270	260	270	280
2" – DN 50	160	145	280	1/2"	6	245	12	276	276	292	292

* For weights, consult manufacturer. ** This connection is threaded NPT.

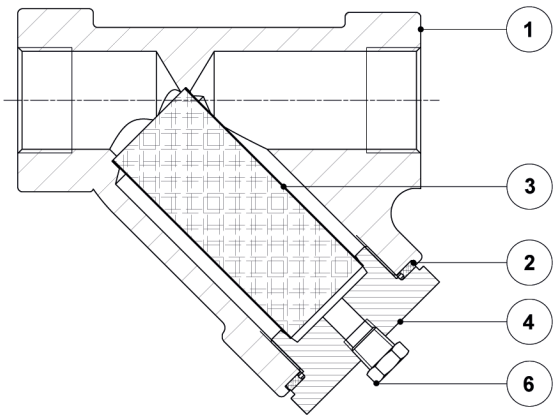

1/2" to 11/2" – DN 15 to DN 40

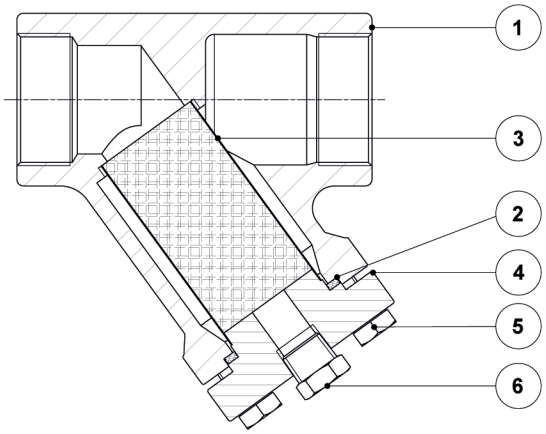

2" – DN 50

MATERIALS		
POS. No.	DESIGNATION	MATERIAL
1	Body	A105 / 1.0432
2	* Gasket	Graphite
3	* Strainer screen	AISI 304 / 1.4301
4	Cap	A105 / 1.0432
5	Bolt	Steel 8.8
6	Plug	A105 / 1.0432

* Available spare parts.

We reserve the right to change the design and material of this product without notice.