AUTOMATIC AIR AND GAS VENTS FOR LIQUID SYSTEMS
AE45.2
(Stainless steel ; 1" x 1/2" and 1" x 1" – DN 25 x 15 and DN 25 x 25)

DESCRIPTION

The ADCA AE45.2 is a series of automatic vents designed to remove air or gases from water and other liquid systems, without requiring any external source of energy.
They are capable of handling significant loads during start-up while still being able to discharge smaller loads in continuous modulating operation with one single orifice.
These ball float type vents are manufactured in stainless steel, available with soft sealing, and can be used in combination with other air elimination and separation systems or directly applied at high points in the pipelines.





MAIN FEATURES

Suitable for start-up and continuous operation with one single orifice.
Allow fast and easy inline maintenance.
Corrosion resistant internal parts.
No balancing pipe required.

OPTIONS: Metal to metal sealing.
Threaded connection on cover, closed with plug.
HVV – Hand vent valve.

USE: Cold, hot and superheated water or other liquids compatible with the construction.

AVAILABLE MODELS: AE45.2-6, AE45.2-14, AE45.2-21 and AE45.2-32 – stainless steel.

SIZES: 1" x 1/2" and 1" x 1"; DN 25 x 15 and DN 25 x 25.

CONNECTIONS: Female threaded ISO 7 Rp or NPT.
Flanged EN 1092-1 PN 40.
Flanged ASME B16.5 Class 150 or 300.
Socket weld (SW) ASME B16.11.

INSTALLATION: Vertical installation.
It must be installed absolutely vertically at the points in the plant where the air tends to collect.
See IMI – Installation and maintenance instructions.

ΔPMX: AE45.2-6 – 6 bar
AE45.2-14 – 14 bar
AE45.2-21 – 21 bar
AE45.2-32 – 32 bar

CE MARKING – GROUP 2 (PED – EUROPEAN DIRECTIVE)		
CLASS 150	**PN 40**	**CATEGORY**
All sizes	–	SEP
–	All sizes	1 (CE marked)

BODY LIMITING CONDITIONS			
FLANGED PN 40 *	**FLANGED CLASS 150 ****	**FLANGED CLASS 300 ****	**RELATED TEMP.**
ALLOWABLE PRESSURE	**ALLOWABLE PRESSURE**	**ALLOWABLE PRESSURE**	
37,9 bar	13,3 bar	34,4 bar	100 ºC
31,8 bar	11,1 bar	28,8 bar	200 ºC
29,9 bar	10,2 bar	26,6 bar	250 ºC
27,6 bar	9,7 bar	25,2 bar	300 ºC

PMO – Maximum operating pressure: 32 bar.
TMO – Maximum operating temperature:
FPM valve sealing: 200 ºC.
Metal to metal sealing: 250 ºC.
Minimum liquid specific weight: 0,75 kg/dm³.
* Acc. to EN 1092-1:2018; ** Acc. to EN 1759-1:2004.
Body limiting conditions PN 40 or below, depending on the type of connection adopted. Rating PN 40 for threaded and SW versions.

We reserve the right to change the design and material of this product without notice.

FLOW RATE CAPACITY (NL/min)																
MODEL	SIZE (INLET)	DIFFERENTIAL PRESSURE (bar)														
		0,1	0,5	1	2	4	6	8	10	12	14	16	18	21	25	32
AE45.2-6	1" – DN 25	201	440	550	803	1340	1875	–	–	–	–	–	–	–	–	–
AE45.2-14	1" – DN 25	127	279	349	510	851	1191	1530	1870	2210	2550	–	–	–	–	–
AE45.2-21	1" – DN 25	97	212	266	388	648	907	1166	1425	1683	1942	2201	2460	2848	–	–
AE45.2-32	1" – DN 25	38	82	104	151	252	354	455	556	657	758	859	960	1112	1314	1668

Values shown refer to capacities of air discharge at 15 ºC, under average atmospheric pressure (1013 mbar).
If the air temperature differs from 15 ºC, the discharge capacity can be corrected by multiplying it by: $\frac{288}{273 + T}$, where T is the actual temperature in ºC.
It may be assumed that the temperature of the air is equal to the temperature of the water.

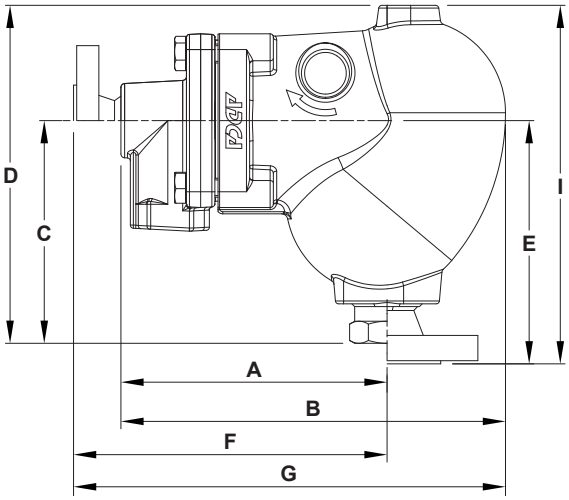

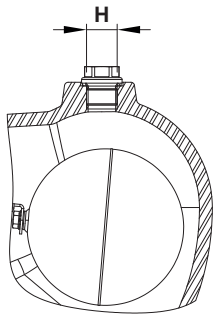

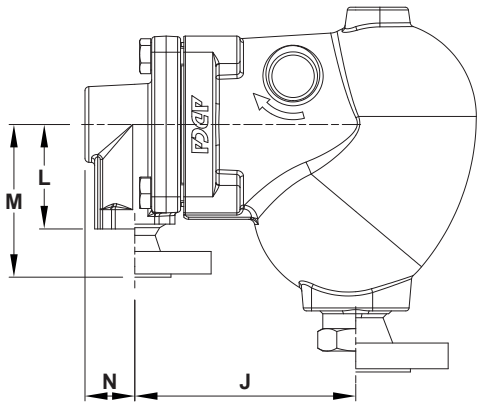

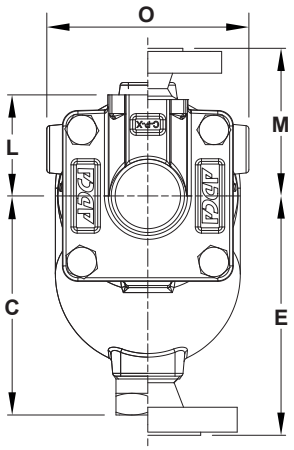

DIMENSIONS (mm)																				
SIZE	THREADED / SW										PN 40									
	A	B	C	D	H *	J	L	N	O	WGT. (kg)	E	F	G	H *	I	J	M	O	WGT. (kg)
1" x 1/2" – DN 25 x 15	168	243	141	214	3/8"	137	65	31	130	9,2	154	198	273	3/8"	227	137	95	130	11,1
1" x 1" – DN 25 x 25	168	243	141	214	3/8"	137	65	31	130	9,1	154	198	273	3/8"	227	137	95	130	11,5

* As standard, in versions with EN flanges or female ISO 7 Rp threads, these connections are female threaded ISO 228. In versions with ASME flanges, female NPT threads or SW, these connections are female threaded NPT.

DIMENSIONS (mm)																		
SIZE	CLASS 150									CLASS 300								
	E	F	G	H *	I	J	M	O	WGT. (kg)	E	F	G	H *	I	J	M	O	WGT. (kg)
1" x 1/2"	169	203	278	3/8"	242	137	100	130	10,4	176	213	288	3/8"	249	137	110	130	11,3
1" x 1"	169	203	278	3/8"	242	137	100	130	11	176	213	288	3/8"	249	137	110	130	12,2

* As standard, in versions with EN flanges or female ISO 7 Rp threads, these connections are female threaded ISO 228. In versions with ASME flanges, female NPT threads or SW, these connections are female threaded NPT.

We reserve the right to change the design and material of this product without notice.

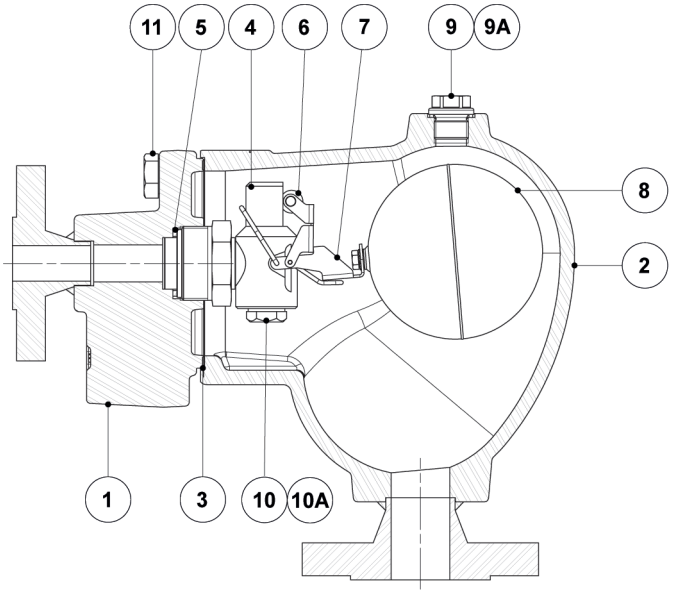

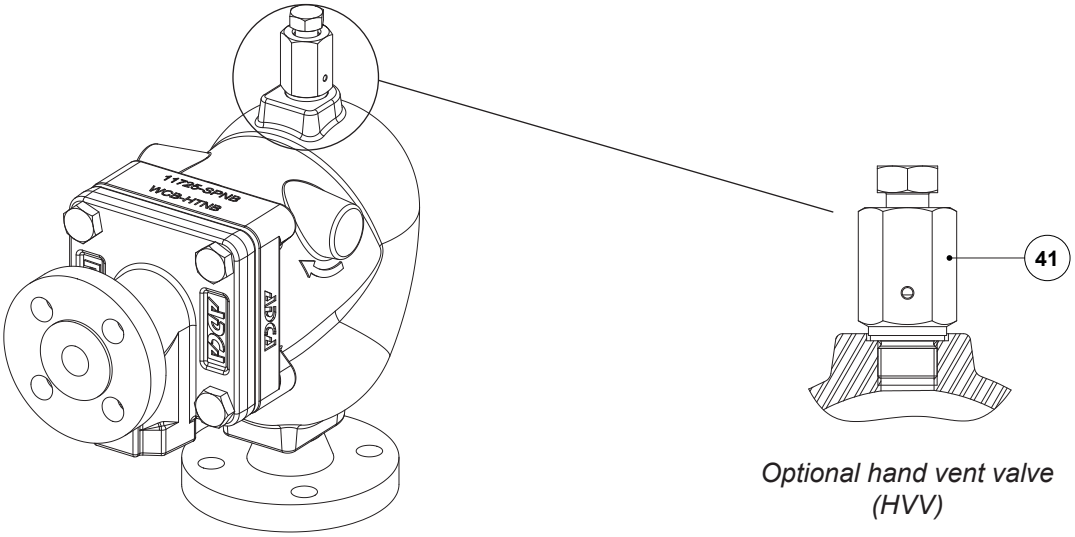

Optional hand vent valve (HVV)

MATERIALS		
POS. No.	**DESIGNATION**	**MATERIAL**
1	Body	AISI 316L / 1.4404
2	Cover	A351 CF8M / 1.4408; AISI 316L / 1.4404
3	* Gasket	Stainless steel / Graphite
4	* Seat	AISI 303 / 1.4305
5	* Gasket	Copper
6	* Valve ball	AISI 316 / 1.4401; FPM
7	* Lever	AISI 304 / 1.4301
8	* Float	AISI 304 / 1.4301
9	Plug	AISI 316L / 1.4404
9A	** Gasket	Copper
10	Plug	AISI 304 / 1.4301
10A	Gasket	Copper
11	Bolt	Stainless steel A2-70
41	Hand vent valve	AISI 303 / 1.4305; AISI 316L / 1.4404

* Available spare parts. ** Not applicable in NPT version.

We reserve the right to change the design and material of this product without notice.

FLOW DIRECTION

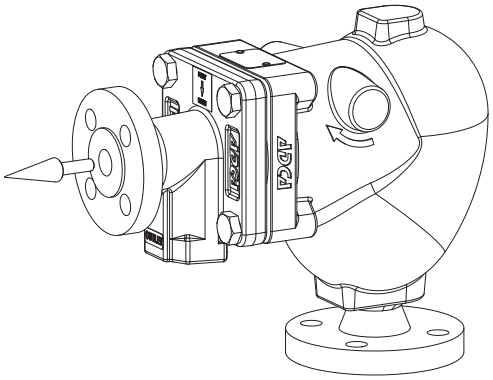

VF – Vertical inlet / straight front outlet

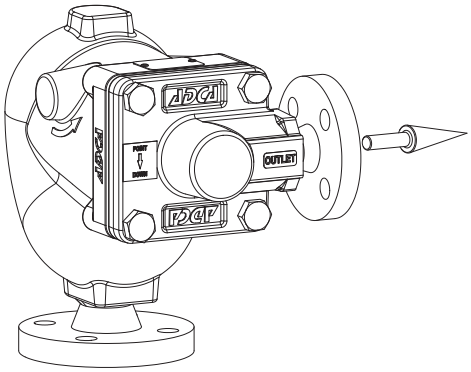

VR – Vertical inlet / right side outlet

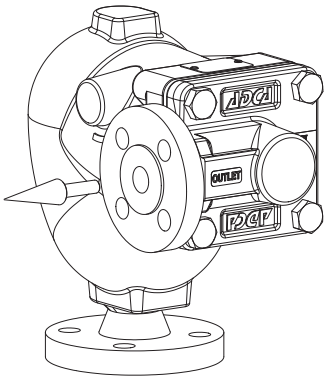

VL – Vertical inlet / left side outlet

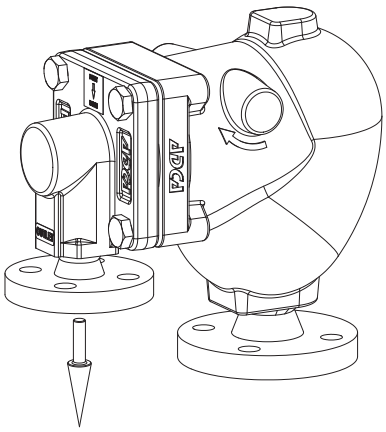

VB – Vertical inlet / top to bottom outlet

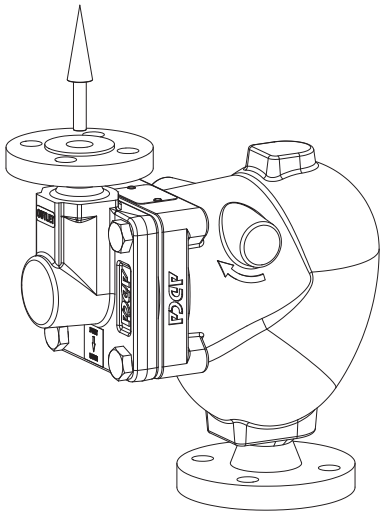

VT – Vertical from bottom to top

We reserve the right to change the design and material of this product without notice.

ORDERING CODES AE45.2

MODEL	AE452	2	V	XX	VF	A	15	A	25	
AE45.2 – AISI 316L / 1.4404 stainless steel	**AE452**									
MAXIMUM ALLOWABLE DIFFERENTIAL PRESSURE (ΔPMX)										
6 bar		**2**								
14 bar		**4**								
21 bar		**5**								
32 bar		**7**								
VALVE SEALING										
FPM (standard)			**V**							
Metal to metal			**M**							
COVER CONNECTIONS										
None				**XX**						
3/8" threaded connections on top, closed with plug (mandatory if any options are considered)				**10**						
OPTIONS										
If any, these have specific separate ordering codes, please refer to the appropriate documentation										
FLOW DIRECTION										
Vertical inlet / straight front outlet					**VF**					
Vertical inlet / top to bottom outlet					**VB**					
Vertical inlet / right side outlet					**VR**					
Vertical inlet / left side outlet					**VL**					
Vertical from bottom to top					**VT**					
OUTLET PIPE CONNECTION										
Female threaded ISO 7 Rp						**A**				
Female threaded NPT						**C**				
Socket weld (SW) ASME B16.11						**H**				
Flanged EN 1092-1 PN 40						**N**				
Flanged ASME B16.5 Class 150						**U**				
Flanged ASME B16.5 Class 300						**V**				
OUTLET SIZE										
1/2" or DN 15							**15**			
1" or DN 25							**25**			
INLET PIPE CONNECTION										
Female threaded ISO 7 Rp								**A**		
Female threaded NPT								**C**		
Socket weld (SW) ASME B16.11								**H**		
Flanged EN 1092-1 PN 40								**N**		
Flanged ASME B16.5 Class 150								**U**		
Flanged ASME B16.5 Class 300								**V**		
INLET SIZE										
1" or DN 25									**25**	
SPECIAL CONSTRUCTION / ADDITIONAL OPTIONS										
A full description must to be provided and validated in case of a non-standard construction										**E**

We reserve the right to change the design and material of this product without notice.