AUTOMATIC AIR AND GAS VENTS FOR LIQUID SYSTEMS
AE31.2
(Carbon steel ; 1" x 1/2" – DN 25 x 15)

DESCRIPTION

The ADCA AE31.2 is a series of automatic vents designed to remove air or gases from water and other liquid systems, without requiring any external source of energy.
These ball float type vents are manufactured in carbon steel, available with soft sealing, and can be used in combination with other air elimination and separation systems or directly applied at high points in the pipelines.

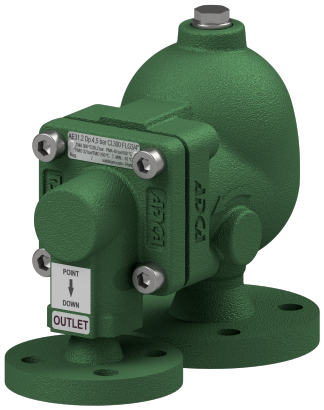

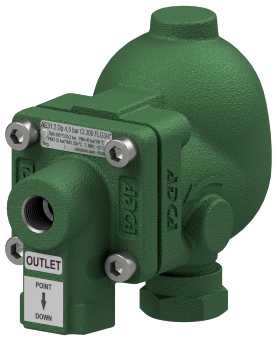

MAIN FEATURES

Allow fast and easy inline maintenance.
Corrosion resistant internal parts.
No balancing pipe required.

OPTIONS: Metal to metal sealing.
Threaded connection on cover, closed with plug.
HVV – Hand vent valve.

USE: Cold, hot and superheated water or other liquids compatible with the construction.

AVAILABLE MODELS: AE31.2-6, AE31.2-14, AE31.2-21 and AE31.2-32 – carbon steel.

SIZES: 1" x 1/2"; DN 25 x 15.

CONNECTIONS: Female threaded ISO 7 Rp or NPT.
Flanged EN 1092-1 PN 40.
Flanged ASME B16.5 Class 150 or 300.
Socket weld (SW) ASME B16.11.

INSTALLATION: Vertical installation.
It must be installed absolutely vertically at the points in the plant where the air tends to collect.
See IMI – Installation and maintenance instructions.

ΔPMX: AE31.2-6 – 6 bar
AE31.2-14 – 14 bar
AE31.2-21 – 21 bar
AE31.2-32 – 32 bar

CE MARKING – GROUP 2 (PED – EUROPEAN DIRECTIVE)	
PN 40	**CATEGORY**
1" x 1/2" – DN 25 x 15	SEP

BODY LIMITING CONDITIONS		
FLANGED PN 40 / CLASS 300 *	**FLANGED CLASS 150 ****	**RELATED TEMPERATURE**
ALLOWABLE PRESSURE	**ALLOWABLE PRESSURE**	
37,1 bar	17,7 bar	100 ºC
33,3 bar	14 bar	200 ºC
30,4 bar	12,1 bar	250 ºC
27,6 bar	10,2 bar	300 ºC

PMO – Maximum operating pressure: 32 bar.
TMO – Maximum operating temperature:
FPM valve sealing: 200 ºC.
Metal to metal sealing: 250 ºC.
Minimum liquid specific weight: 0,75 kg/dm³.
* Acc. to EN 1092-1:2018; ** Acc. to EN 1759-1:2004.
Body limiting conditions PN 40 or below, depending on the type of connection adopted. Rating PN 40 for threaded and SW versions.

We reserve the right to change the design and material of this product without notice.

FLOW RATE CAPACITY (NL/min)																
MODEL	SIZE	DIFFERENTIAL PRESSURE (bar)														
		0,1	0,5	1	2	4	6	8	10	12	14	16	18	21	25	32
AE31.2-6	1" x 1/2" – DN 25 x 15	97	212	266	388	648	907	–	–	–	–	–	–	–	–	–
AE31.2-14	1" x 1/2" – DN 25 x 15	46	100	125	183	306	428	551	673	795	918	–	–	–	–	–
AE31.2-21	1" x 1/2" – DN 25 x 15	33	72	90	132	220	308	396	484	573	660	748	837	969	–	–
AE31.2-32	1" x 1/2" – DN 25 x 15	15	33	41	60	101	141	182	222	263	303	344	385	446	527	669

Values shown refer to capacities of air discharge at 15 ºC, under average atmospheric pressure (1013 mbar).
If the air temperature differs from 15 ºC, the discharge capacity can be corrected by multiplying it by: $\frac{288}{273 + T}$, where T is the actual temperature in ºC.
It may be assumed that the temperature of the air is equal to the temperature of the water.

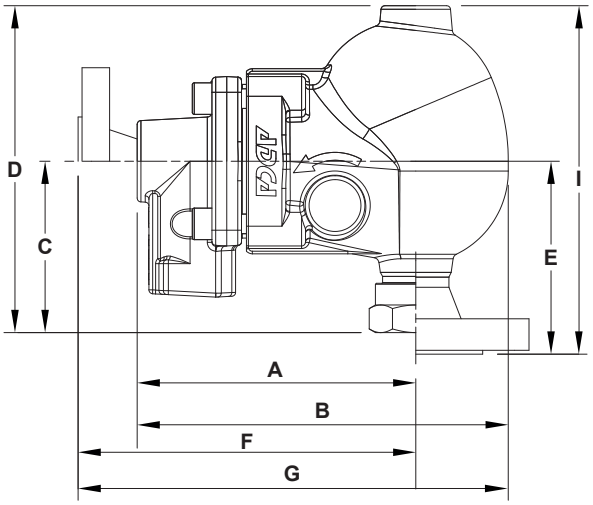

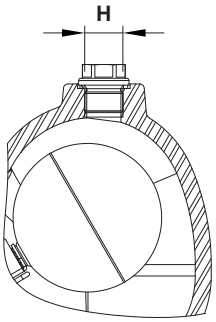

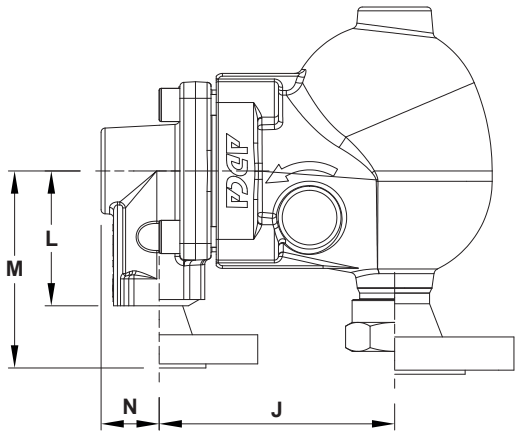

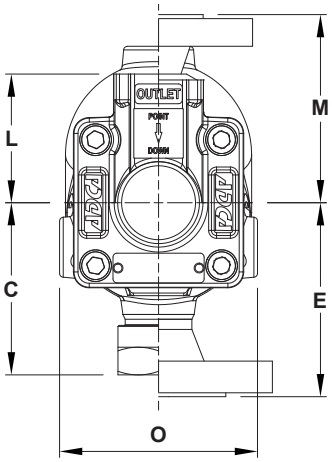

DIMENSIONS (mm)																				
SIZE	THREADED / SW										PN 40									
	A	B	C	D	H *	J	L	N	O	WGT. (kg)	E	F	G	H *	I	J	M	O	WGT. (kg)
1" x 1/2" DN 25 x 15	168	243	141	214	3/8"	137	65	31	130	9	154	198	273	3/8"	227	137	95	130	11,4

* As standard, in versions with EN flanges or female ISO 7 Rp threads, these connections are female threaded ISO 228. In versions with ASME flanges, female NPT threads or SW, these connections are female threaded NPT.

DIMENSIONS (mm)																			
SIZE	CLASS 150									CLASS 300									
	E	F	G	H *	I	J	M	O	WGT. (kg)	E	F	G	H *	I	J	M	O	WGT. (kg)
1" x 1/2"	169	203	278	3/8"	242	137	100	130	10,9	176	213	288	3/8"	249	137	110	130	12,1

* As standard, in versions with EN flanges or female ISO 7 Rp threads, these connections are female threaded ISO 228. In versions with ASME flanges, female NPT threads or SW, these connections are female threaded NPT.

We reserve the right to change the design and material of this product without notice.

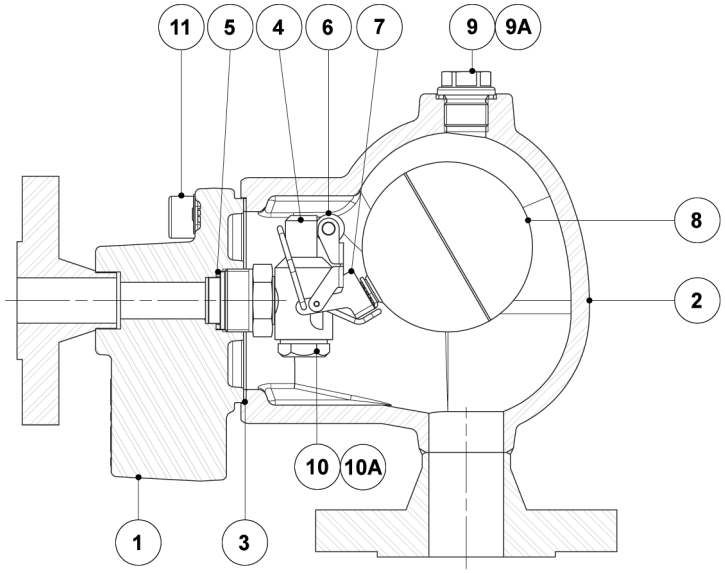

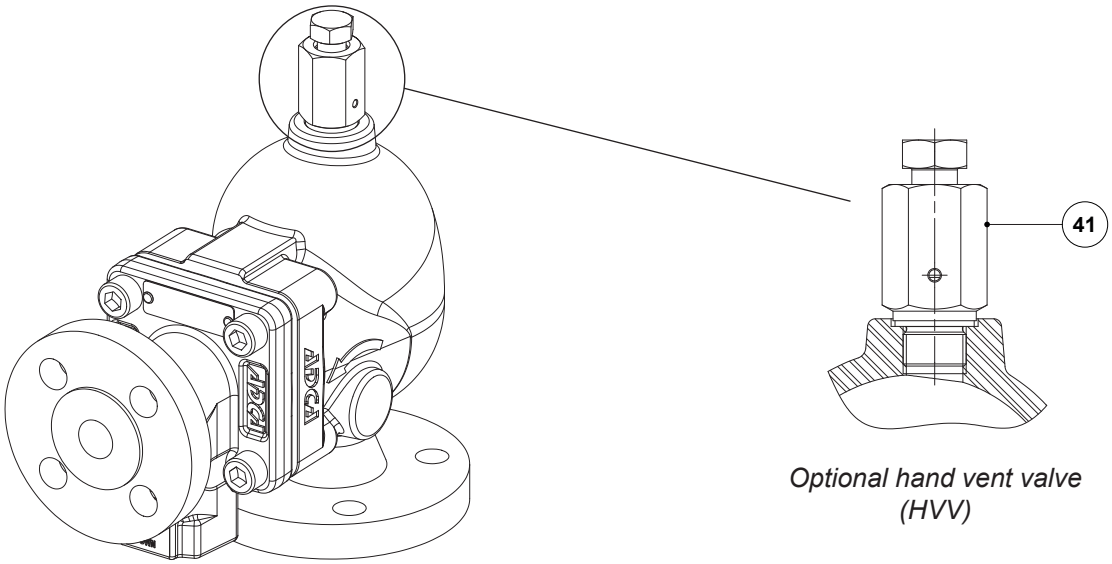

Optional hand vent valve (HVV)

MATERIALS		
POS. No.	**DESIGNATION**	**MATERIAL**
1	Body	P250GH / 1.0460
2	Cover	A216 WCB / 1.0619
3	* Gasket	Stainless steel / Graphite
4	* Seat	AISI 303 / 1.4305
5	* Gasket	Copper
6	* Valve ball	AISI 316 / 1.4401; FPM
7	* Lever	AISI 304 / 1.4301
8	* Float	AISI 304 / 1.4301
9	Plug	AISI 316L / 1.4404
9A	** Gasket	Copper
10	Plug	AISI 304 / 1.4301
10A	Gasket	Copper
11	Bolt	Zinc plated steel
41	Hand vent valve	AISI 303 / 1.4305; AISI 316L / 1.4404

* Available spare parts; ** Not applicable in NPT version.

We reserve the right to change the design and material of this product without notice.

FLOW DIRECTION

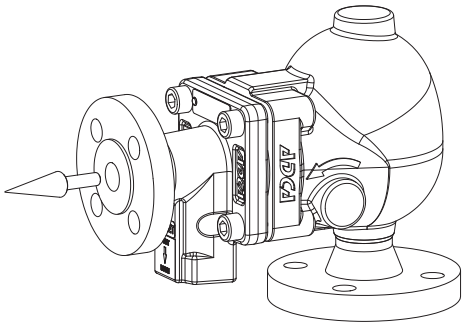

VF – Vertical inlet / straight front outlet

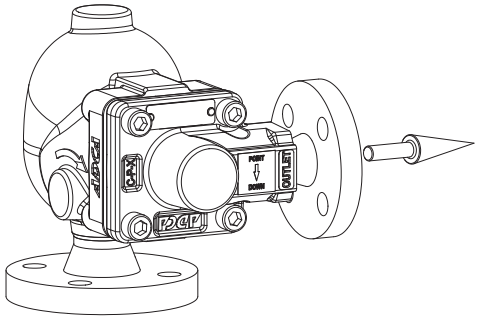

VR – Vertical inlet / right side outlet

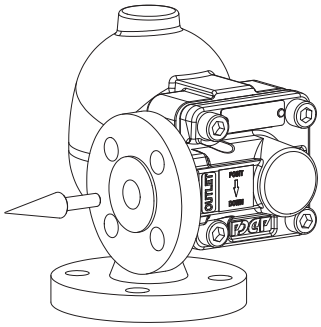

VL – Vertical inlet / left side outlet

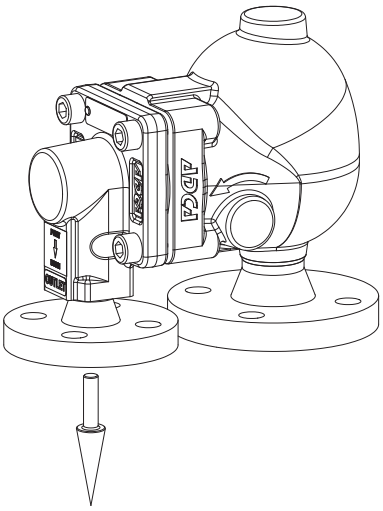

VB – Vertical inlet / top to bottom outlet

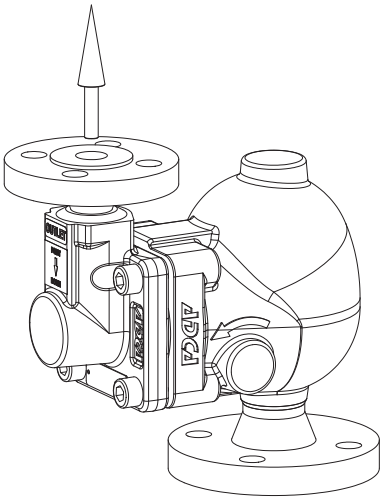

VT – Vertical from bottom to top

We reserve the right to change the design and material of this product without notice.

ORDERING CODES AE31.2

MODEL	AE312	2	V	XX	VF	A	15	A	25	
AE31.2 – Carbon steel	AE312									
MAXIMUM ALLOWABLE DIFFERENTIAL PRESSURE (ΔPMX)										
6 bar		2								
14 bar		4								
21 bar		5								
32 bar		7								
VALVE SEALING										
FPM (standard)			V							
Metal to metal			M							
COVER CONNECTIONS										
None				XX						
3/8" threaded connections on top, closed with plug (mandatory if any options are considered)				10						
OPTIONS										
If any, these have specific separate ordering codes, please refer to the appropriate documentation										
FLOW DIRECTION										
Vertical inlet / straight front outlet					VF					
Vertical inlet / top to bottom outlet					VB					
Vertical inlet / right side outlet					VR					
Vertical inlet / left side outlet					VL					
Vertical from bottom to top					VT					
OUTLET PIPE CONNECTION										
Female threaded ISO 7 Rp						A				
Female threaded NPT						C				
Socket weld (SW) ASME B16.11						H				
Flanged EN 1092-1 PN 40						N				
Flanged ASME B16.5 Class 150						U				
Flanged ASME B16.5 Class 300						V				
OUTLET SIZE										
1/2" or DN 15							15			
INLET PIPE CONNECTION										
Female threaded ISO 7 Rp								A		
Female threaded NPT								C		
Socket weld (SW) ASME B16.11								H		
Flanged EN 1092-1 PN 40								N		
Flanged ASME B16.5 Class 150								U		
Flanged ASME B16.5 Class 300								V		
INLET SIZE										
1" or DN 25									25	
SPECIAL CONSTRUCTION / ADDITIONAL OPTIONS										
A full description must to be provided and validated in case of a non-standard construction										E

We reserve the right to change the design and material of this product without notice.