# NEEDLE VALVES
# NV400

DESCRIPTION

The ADCA NV400 is a series of high pressure needle valves designed for shut-off applications with steam and other industrial fluids.
The NV400B is a special version designed for use as a boiler water sample valve when connected to the bottom sample connection on a VPC TDS blowdown control valve.

MAIN FEATURES

Complete stainless steel construction.
High quality graphite packing.

| | |
|---|---|
| OPTIONS: | Version for oxygen service.<br>Other sizes, materials and connections. |
| USE: | Saturated steam, water, compressed air and other fluids compatible with the construction. |
| AVAILABLE MODELS: | NV400H and NV400B. |
| SIZES: | 1/4" to 1/2". |
| CONNECTIONS: | NV400H – Female threaded ISO 228.<br>NV400B – Inlet: Female threaded ISO 228.<br>Outlet: Comp. fitting 8S (M16 x 1,5).<br>Others on request. |
| INSTALLATION: | In any position. |




**NV400H**




**NV400B**

| CE MARKING – GROUP 2 (PED – EUROPEAN DIRECTIVE) | |
|---|---|
| **PN 400** | **CATEGORY** |
| 1/4" to 1/2" | SEP |

**BODY LIMITING CONDITIONS**

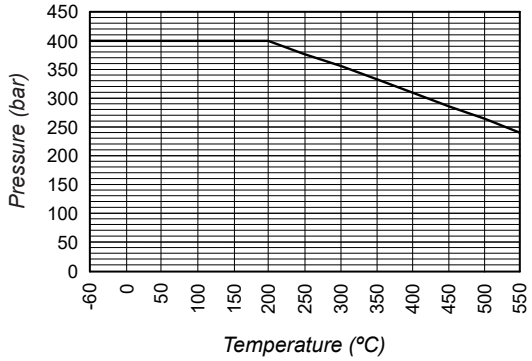

| FLOW RATE COEFFICIENTS (m³/h) – NV400H | | | |
|---|---|---|---|
| **MODEL** | **1/4"** | **3/8"** | **1/2"** |
| **NV400H** | 0,58 | 0,88 | 0,99 |
| **NV400B** | – | – | 0,56 |

For conversion Kvs = Cv (US) x 0,855.

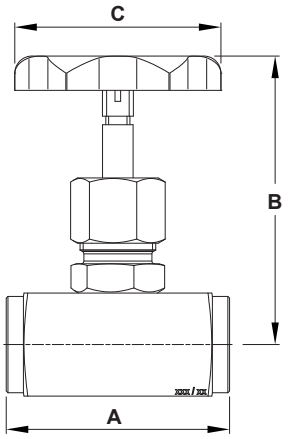


*NV400H*

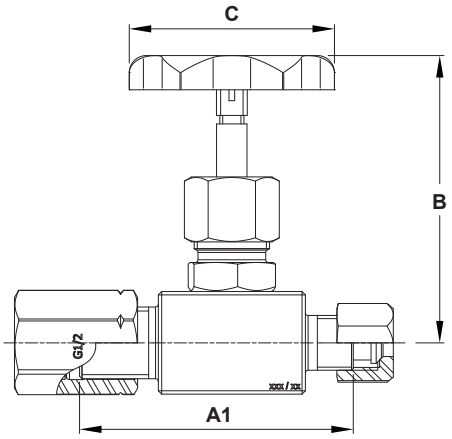


*NV400B*

| DIMENSIONS (mm) | | | | | | | | | | |
|---|---|---|---|---|---|---|---|---|---|---|
| **SIZE** | **NV400H** | | | | | **NV400B** | | | | |
| | **A** | **B** | **C** | **ORIFICE** | **WGT. (kg)** | **A1** | **B** | **C** | **ORIFICE** | **WGT. (kg)** |
| **1/4"** | 55 | 82 | 70 | 6 | 0,5 | – | – | – | – | – |
| **3/8"** | 60 | 82 | 70 | 6 | 0,5 | – | – | – | – | – |
| **1/2"** | 65 | 82 | 70 | 6 | 0,5 | 80 | 82 | 70 | 6 | 0,7 |

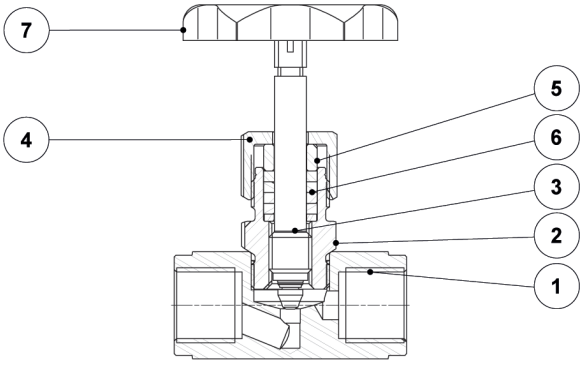


*NV400H*

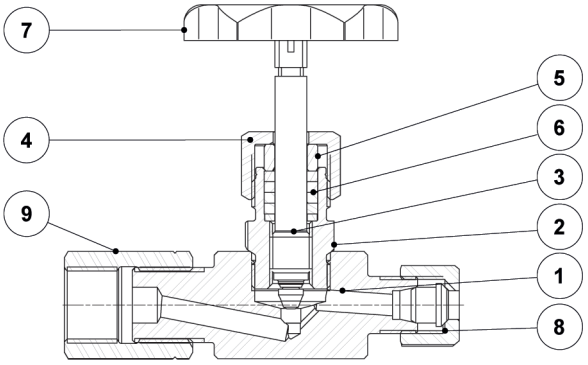


*NV400B*

| MATERIALS | | |
|---|---|---|
| **POS. No.** | **DESIGNATION** | **MATERIAL** |
| **1** | Body | AISI 316Ti / 1.4571 |
| **2** | Bonnet | AISI 316Ti / 1.4571 |
| **3** | Stem | AISI 316Ti / 1.4571 |
| **4** | Packing nut | AISI 316Ti / 1.4571 |
| **5** | Packing gland | AISI 316Ti / 1.4571 |
| **6** | Packing | Graphite |
| **7** | Handwheel | Metallic |
| **8** | Compression fitting | AISI 316Ti / 1.4571 |
| **9** | Alignment union | AISI 316Ti / 1.4571 |



We reserve the right to change the design and material of this product without notice.