# TANK BLANKETING REGULATORS
# BKVi2
# (Low pressure vent valve)

## DESCRIPTION

Tank blanketing valves are commonly used in tank storage systems to prevent and protect against explosions (avoiding flammable liquids being vented from the vessel), to control product contamination against external air that may fill the vapour space, to reduce evaporation losses (consequently, production losses), to reduce internal corrosion (caused by air and moisture) and to prevent vacuum condition.
The blanketing process consists in covering the stored medium, usually a liquid, with a gas (normally N2).

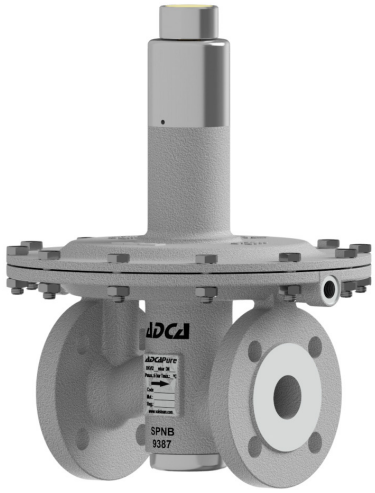

## MAIN FEATURES

Compact design.
Non-rising adjustment knob.
FDA / USP Class VI compliant seals.

## STANDARD SURFACE FINISH

Internal movable parts and machined surfaces: ≤ 0,76 µm Ra – SF3.
Other surfaces: as casted.
Ultrasonic cleaning.

**OPTIONS:**
Leakage line connection.
Dome-loading.
Top cap (adjustment screw with cover).
Gauge connection on body.
External sensing line connection.
Blanketing with vacuum.
ATEX Ex version.

**USE:**
Air, nitrogen, argon and other gases compatible with the construction.

**AVAILABLE MODELS:**
BKVi2 – low pressure venting valve.

**SIZES:**
1/2" and 1"; DN 15 and DN 25.

**REGULATING RANGES:**
5 to 10 mbar; 10 to 50 mbar; 20 to 200 mbar; 50 to 500 mbar; 5 to 4000 mbar (dome-loading).

**CONNECTIONS:**
Flanged EN 1092-1 PN 16.
Flanged ASME B16.5 Class 150.

**INSTALLATION:**
Vertical installation recommended, to allow drainage, or horizontal as close to the process as possible in order to prevent long pipe sections and flow restrictions.
See IMI – Installation and maintenance instructions.

| CE MARKING – GROUP 2 (PED – EUROPEAN DIRECTIVE) | |
|---|---|
| **PN 16** | **CATEGORY** |
| 1/2" and 1" – DN 15 and 25 | SEP |

| CE MARKING – ATEX VERSION (ATEX – EUROPEAN DIRECTIVE) | |
|---|---|
| **PN 16** | **CATEGORY** |
| 1/2" and 1" – DN 15 and 25 | Ex h IIB T6...T3 Gb |

| LIMITING CONDITIONS * | |
|---|---|
| Maximum allowable pressure | 6 bar |
| Maximum upstream pressure ** | 500 mbar |
| Minimum upstream pressure | 5 mbar |
| Maximum operating temperature | 130 ºC |

* Other limits on request. Maximum operating conditions may be limited by the valve end connections due to normative restrictions.
** 4000 mbar with dome-loading.
**Warning: Blanketing valves are no substitute for safety valves or vacuum relief valves.**


We reserve the right to change the design and material of this product without notice.

| AIR CAPACITIES (Nm³/h) SEAT Ø21 mm | | | | | | | |
|---|---|---|---|---|---|---|---|
| SIZE | SET PRESSURE | INLET PRESSURE (mbar) | | | | | |
| | | 10 | 20 | 40 | 100 | 200 | 500 |
| 1/2" – DN 15 | 25% Overpressure | 4,5 | 10,5 | 16 | 27 | 45 | 95 |
| | 50% Overpressure | 4,5 | 10,5 | 16 | 27 | 45 | 95 |
| | 75% Overpressure | 4,5 | 10,5 | 16 | 27 | 45 | 95 |
| | 100% Overpressure | 4,5 | 10,5 | 16 | 27 | 45 | 95 |
| 1" – DN 25 | 25% Overpressure | 5,3 | 11,8 | 18 | 31 | 52 | 105 |
| | 50% Overpressure | 7,2 | 14,5 | 26 | 40 | 66 | 125 |
| | 75% Overpressure | 8,3 | 17 | 30 | 47 | 82 | 136 |
| | 100% Overpressure | 9,8 | 18 | 36 | 52 | 91 | 148 |

## OPTIONS

| LEAKAGE LINE CONNECTION | DOME-LOADING | TOP CAP |
|---|---|---|
| 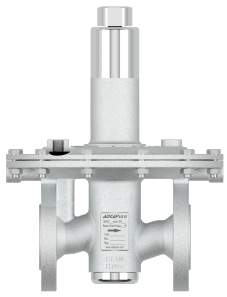 | 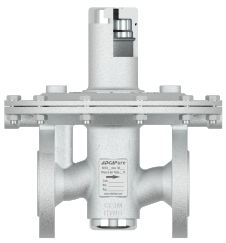 | 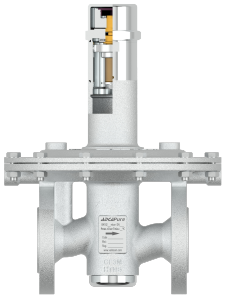 |
| **GAUGE CONNECTION** | **EXTERNAL SENSING LINE CONNECTION** | **ATEX COMPLIANT** |
| 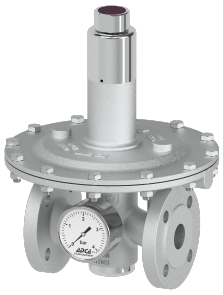 | 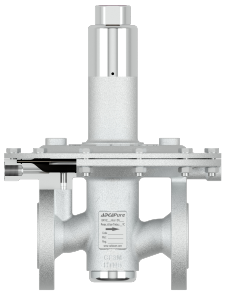 | 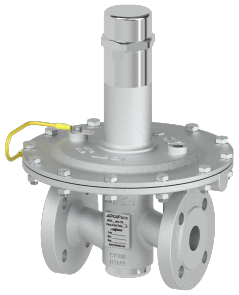 |



We reserve the right to change the design and material of this product without notice.

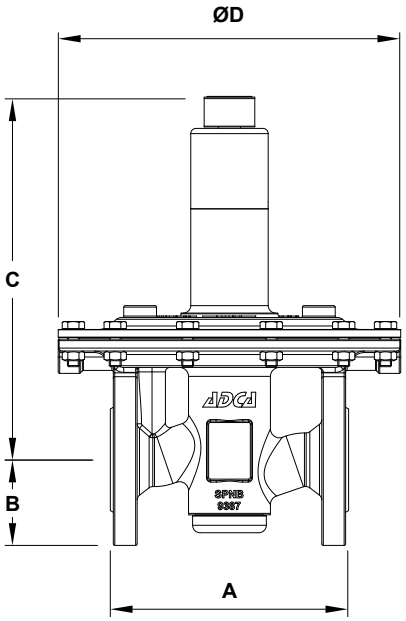


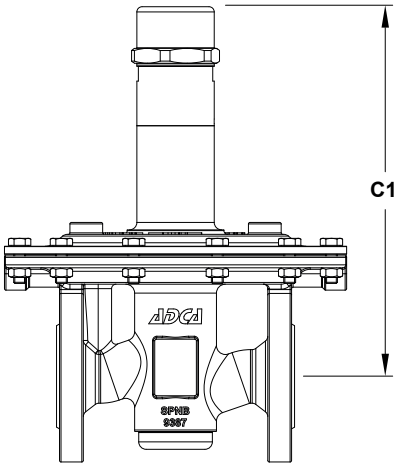


*Optional top cap*

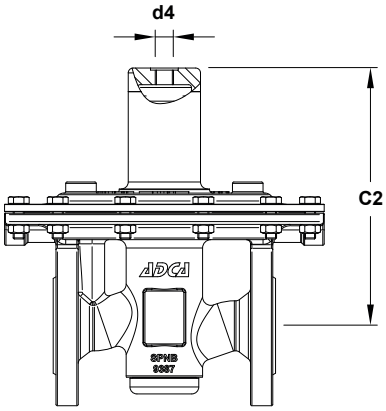


*Optional dome-loading*

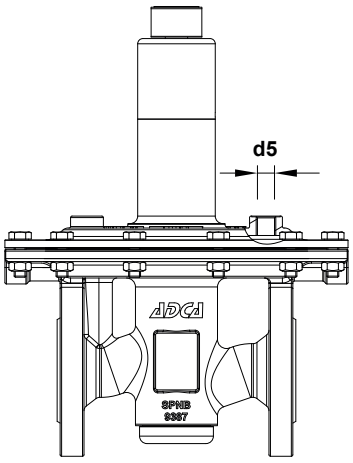


*Optional leakage line connection*

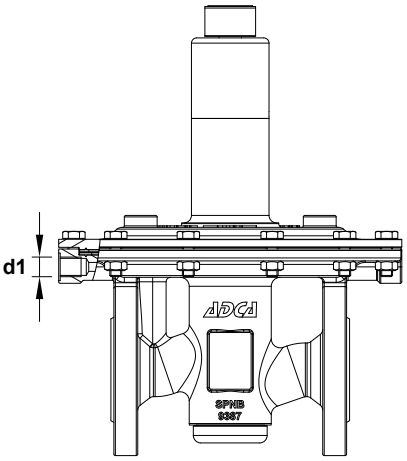


*Optional external sensing line connection*

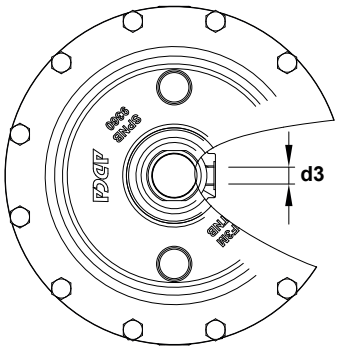


*Optional gauge connection*

| DIMENSIONS (mm) | | | | | | | | | | | |
|---|---|---|---|---|---|---|---|---|---|---|---|
| **SIZE** | **A** | **B** | **C** | **C1** | **C2** | **ØD** | **d1** | **d3** | **d4** | **d5** | **WEIGHT (kg)** |
| **1/2" – DN 15** | 130 | 47,5 | 243,5 | 249 | 186 | 230 | 1/4" | 1/4" | 1/4" | 1/4" | 9,7 |
| **1" – DN 25** | 160 | 57,5 | 243,5 | 249 | 186 | 230 | 1/4" | 1/4" | 1/4" | 1/4" | 10,8 |



We reserve the right to change the design and material of this product without notice.

## MATERIALS

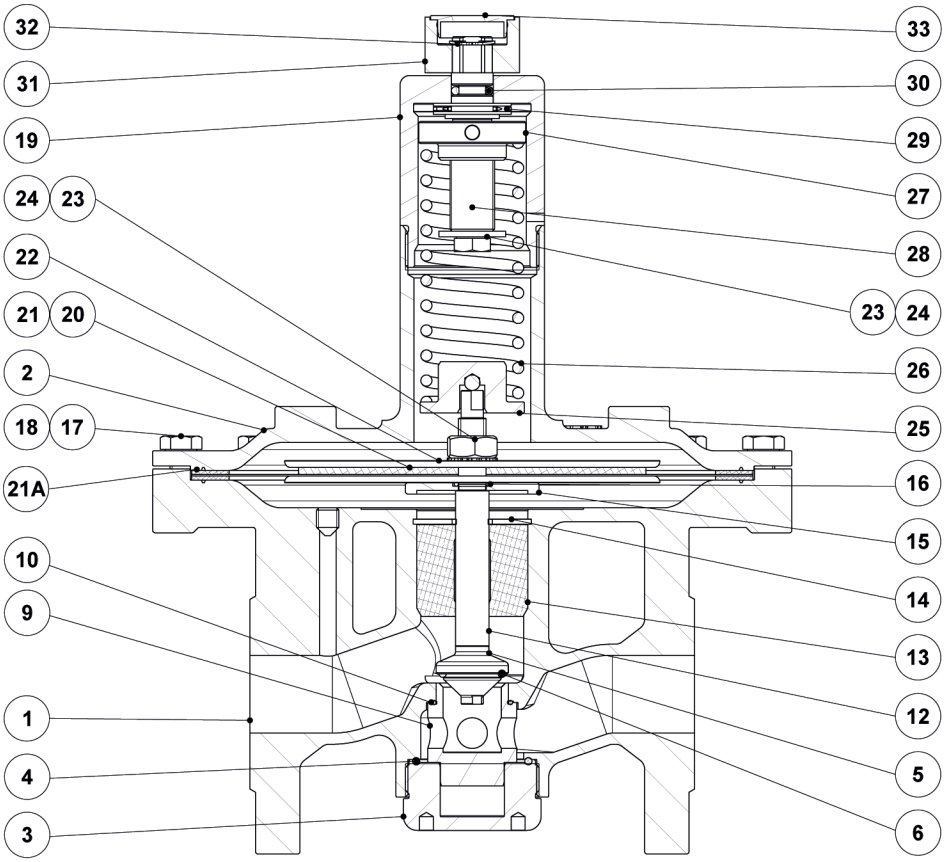


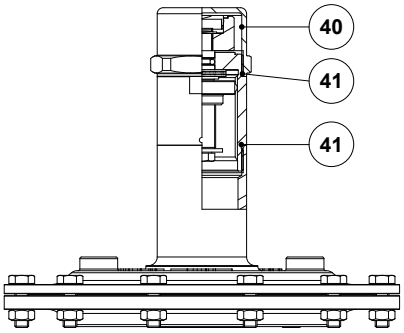


*Optional top cap*

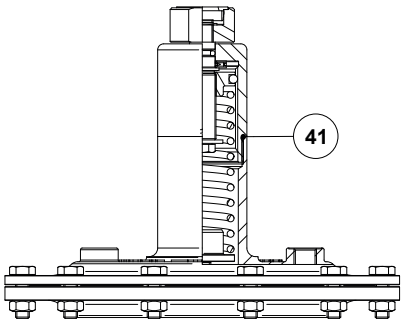


*Optional leakage line connection*

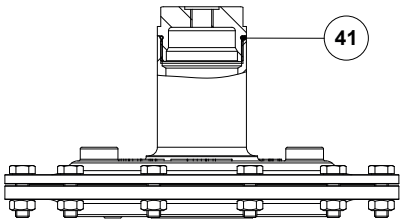


*Optional dome-loading*



We reserve the right to change the design and material of this product without notice.

| MATERIALS | | |
|---|---|---|
| **POS. No.** | **DESIGNATION** | **MATERIAL** |
| **1** | Valve body | A351 CF3M / 1.4409 |
| **2** | Cover | A351 CF3M / 1.4409 |
| **3** | Bottom cover | AISI 316L / 1.4404 |
| **4** | * O-ring | ** EPDM |
| **5** | * Plug disc | AISI 316L / 1.4404 |
| **6** | * Valve seal | ** EPDM; FPM |
| **9** | * Seat | AISI 316L / 1.4404 |
| **10** | * O-ring | ** EPDM |
| **12** | Stem | AISI 316L / 1.4404 |
| **13** | Stem guide | ** PTFE |
| **14** | Retaining ring | Stainless steel A2-70 |
| **15** | Diaphragm support plate | AISI 316L / 1.4404 |
| **16** | * O-ring | ** EPDM |
| **17** | Bolt | Stainless steel A2-70 |
| **18** | Nut | Stainless steel A2-70 |
| **19** | Spring cover | AISI 316L / 1.4404 |
| **20** | * Lower diaphragm | PTFE (Gylon) |
| **21** | * Upper diaphragm | EPDM |
| **21A** | * Gasket | ** EPDM |
| **22** | Diaphragm plate | AISI 316L / 1.4404 |
| **23** | Nut | Stainless steel A2-70 |
| **24** | * Washer | Stainless steel A2 |
| **25** | Lower spring guide | AISI 316L / 1.4404 |
| **26** | * Adjustment spring | AISI 302 / 1.4300 |
| **27** | Upper spring guide | AISI 316L / 1.4404 |
| **28** | Adjustment screw | Brass |
| **29** | Bearing | Corrosion resistant steel |
| **20** | * O-ring | NBR |
| **31** | Adjustment knob | AISI 316L / 1.4404 |
| **32** | Shaft ring | Stainless steel |
| **33** | Cover nut | Plastic |
| **40** | Top cap | AISI 316L / 1.4404 |
| **41** | * O-ring | NBR |

* Available spare parts; ** Others on request.
FDA / USP Class VI seals certificate on request.
All valves have a serial number. In case of non standard valves, this number must be supplied if spare parts are ordered.

## TYPICAL INSTALLATION

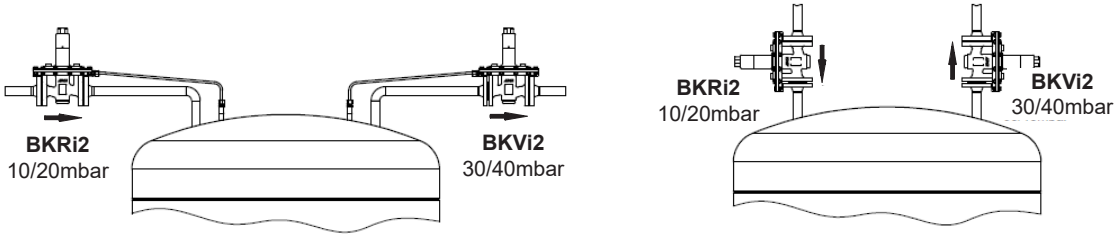


*Blanketing with overpressure*



We reserve the right to change the design and material of this product without notice.

## ORDERING CODES BKVi2

| VALVE MODEL | BVI | A | 2 | T | E | I | X | X | X | 0 | L | 15 | |
|---|---|---|---|---|---|---|---|---|---|---|---|---|---|
| BKVi2 – A351 CF3M / 1.4409 blanketing low pressure vent valve | BVI | | | | | | | | | | | | |
| **REGULATING RANGE** | | | | | | | | | | | | | |
| 5 to 10 mbar | | 0 | | | | | | | | | | | |
| 10 to 50 mbar | | 1 | | | | | | | | | | | |
| 20 to 200 mbar | | 2 | | | | | | | | | | | |
| 50 to 500 mbar | | 3 | | | | | | | | | | | |
| 5 to 4000 mbar (dome-loading) | | A | | | | | | | | | | | |
| **VALVE SEAT ORIFICE** | | | | | | | | | | | | | |
| Seat diameter 21 mm | | | 2 | | | | | | | | | | |
| **DIAPHRAGM** | | | | | | | | | | | | | |
| PTFE (Gylon) | | | | T | | | | | | | | | |
| **VALVE SEALING** | | | | | | | | | | | | | |
| EPDM | | | | | E | | | | | | | | |
| FPM (USP Class VI on request) | | | | | V | | | | | | | | |
| **ADJUSTMENT KNOB, TOP CAP AND LEAKAGE LINE CONNECTION** | | | | | | | | | | | | | |
| Stainless steel adjustment knob | | | | | | I | | | | | | | |
| Top cap (adjustment screw with cover) | | | | | | T | | | | | | | |
| Stainless steel adjustment knob w/ ISO 228 G 1/4" leakage line connection | | | | | | L | | | | | | | |
| Stainless steel adjustment knob w/ 1/4" NPT leakage line connection | | | | | | M | | | | | | | |
| Top cap (adjustment screw with cover) w/ ISO 228 G 1/4" leakage line connection **(a)** | | | | | | U | | | | | | | |
| Top cap (adjustment screw with cover) w/ 1/4" NPT leakage line connection **(a)** | | | | | | V | | | | | | | |
| Dome-loading – ISO 228 G 1/4" **(b)** | | | | | | X | | | | | | | |
| Dome-loading – 1/4" NPT **(b)** | | | | | | C | | | | | | | |
| **GAUGE CONNECTIONS** | | | | | | | | | | | | | |
| Without gauge connections | | | | | | | X | | | | | | |
| Threaded gauge connection on the left side (relative to flow direction) – downstream pressure – ISO 228 G 1/4" | | | | | | | 4 | | | | | | |
| Threaded gauge connection on the right side (relative to flow direction) – downstream pressure – ISO 228 G 1/4" | | | | | | | 3 | | | | | | |
| Threaded gauge connection on both sides – downstream pressure – ISO 228 G 1/4" | | | | | | | 2 | | | | | | |
| Threaded gauge connection on the left side (relative to flow direction) – downstream pressure – 1/4" NPT | | | | | | | W | | | | | | |
| Threaded gauge connection on the right side (relative to flow direction) – downstream pressure – 1/4" NPT | | | | | | | Y | | | | | | |
| Threaded gauge connection on both sides – downstream pressure – 1/4" NPT | | | | | | | Z | | | | | | |
| **SURFACE FINISH (c)** | | | | | | | | | | | | | |
| Standard surface finish | | | | | | | | X | | | | | |
| Mirror mechanical polished external surfaces (SF1) | | | | | | | | P | | | | | |
| Electropolished internal wetted parts (SF5) | | | | | | | | E | | | | | |
| **SPECIAL FEATURES** | | | | | | | | | | | | | |
| None | | | | | | | | | X | | | | |
| **EXTERNAL SENSING LINE CONNECTIONS** | | | | | | | | | | | | | |
| Internal sensing line (standard) | | | | | | | | | | 0 | | | |
| External sensing line connection – ISO 228 G 1/4" | | | | | | | | | | 1 | | | |
| External sensing line connection – 1/4" NPT | | | | | | | | | | 2 | | | |
| **PIPE CONNECTIONS** | | | | | | | | | | | | | |
| Flanged EN 1092-1 PN 16 | | | | | | | | | | | L | | |
| Flanged ASME B16.5 Class 150 | | | | | | | | | | | U | | |
| **SIZE** | | | | | | | | | | | | | |
| 1/2" or DN 15 | | | | | | | | | | | | 15 | |
| 1" or DN 25 | | | | | | | | | | | | 25 | |
| **SPECIAL CONSTRUCTION / ADDITIONAL OPTIONS** | | | | | | | | | | | | | |
| ATEX compliant version | | | | | | | | | | | | | EX |
| Full description or additional codes have to be added in case of non-standard combination | | | | | | | | | | | | | E |

**(a)** Mandatory in case of ATEX compliant version.
**(b)** Mandatory in case of dome-loading.
**(c)** Consult TIS.GIA – General information ADCAPure – for further details and other surface finish options.



We reserve the right to change the design and material of this product without notice.