Cast steel “Y” strainer flanged RF ANSI class # 300



Art. 1803

Design & construction: API 600, API 6D
Face to face length: ASME / ANSI B16.10
Connections & dimensions: ASME / ANSI B16.5, ASME / ANSI B 16.25
Flanges: RF ANSI #300
Pressure & temperature: ASME / ANSI B16.34
Test: API 598

The “Y” strainers are suitable to retain and collect any impurity from the pipeline. The cast steel “Y” strainers are manufactured in cast steel A216WCB according to API, ANSI, ASME standard, for industrial applications. The basket screen made in stainless steel 304 or 316 is removable for its cleaning.

Materials

body-cover	cast steel A216WCB, GP240GH+N
screen	stainless steel AISI 304
gasket	graphite
drain plug	forged steel A105
bolts	A 193 GR. B7
nuts	A 194 GR. 2H
painting	high chlorinated polyethylene HCPE

Dimensions

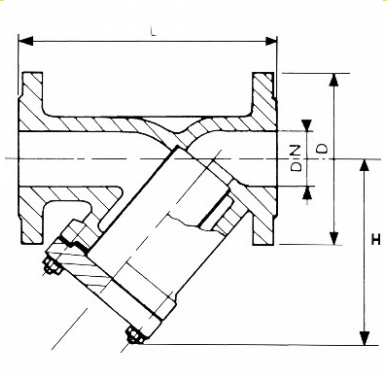

DN	L mm.	H mm.	D mm.	Weight kg.
2"	267	215	165	14
3"	318	275	210	31
4"	356	340	254	43
6"	445	390	318	91
8"	533	520	381	160
10"	622	640	444	245
12"	711	711	521	290

Pressure

Hydrostatic test				Pneumatic test	
shell		seat			
bars	psig	bars	psig	bars	psig
78	1130	58	840	≥5,6	≥80

Valvotubi ind. S.r.l. ®
Via M.Monti 30/b
48123 Ravenna, Italy

ph +39 0544 452279
fax +39 0544 451148

info@valvotubi.it
www.valvotubi.it