Forged steel gate valves ANSI class # 800



Art. 1511

Design & construction: API 602, ASME / ANSI B16.34
Ends connections: SW ASTM / ANSI B16.11; NPT ASME / ANSI B1.20.1, class #800
Pressure & temperature: ASME / ANSI B16.34
Test: API 598
Fig. 1512: ASTM A105/F6 + 1/2 STELLITE (TRIM. N.8)
Fig. 1513: ASTM A182 F316/316

The forged steel gate valves are on-off valves manufactured according to API, ANSI, ASME standard, for industrial applications. The forged steel gate valves are manufactured with: outside screw and yoke, bolted or welded bonnet , rising stem, NPT threaded ends or socked weld ends. The body of the valve is in A105/F6, other materials are available upon request. Handwheel operated.

Materials

body-bonnet	forged steel A105, P250GH
stem	stainless steel A182 F6
sealing seat facing	A 182 F6
stem packing	graphited
bonnet gasket	spiral wound AISI 304

Dimensions

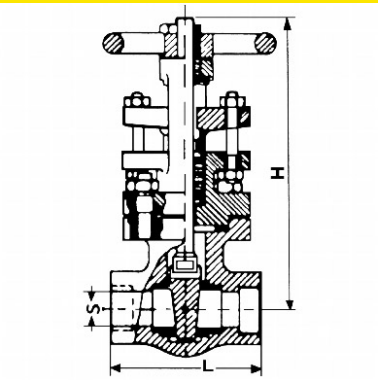

DN	S mm.	L mm.	H mm.	Weight kg.
1/4"	9	60	135	1
3/8"	9	60	135	1.5
1/2"	14	70	160	1.5
3/4"	18	92	180	2
1"	22	110	195	3
1"1/4	31	127	230	6
1"1/2	35	130	230	7.5
2"	43	159	235	10.5

Pressure

Pressure related to temperature

°F	°C	PSI	kg/cm2
100	38	2000	141
200	93	1940	136
300	149	1895	133
400	204	1850	130
500	260	1735	122
600	316	1540	108

Valvotubi ind. S.r.l. ®
Via M.Monti 30/b
48123 Ravenna, Italy

ph +39 0544 452279
fax +39 0544 451148

info@valvotubi.it
www.valvotubi.it