Forged steel piston check valves ANSI class # 800



Art. 1711

Design & construction: API 602, ASME / ANSI B16.34
End connections: SW ASTM / ANSI B16.11; NPT ASME / ANSI B1.20.1, class #800
Pressure & temperature: ASME / ANSI B16.34
Test: API 598
Fig. 1712: ASTM A105/F6 + 1/2 STELLITE (TRIM. N.8)
Fig. 1713: ASTM A182 F316/316

The forged steel piston check valves are manufactured according to API, ANSI, ASME standard, for industrial applications. The forged check valves can be piston type, ball type, swing check type.The cover is bolted, NPT threaded ends or socked weld ends. The body of the valve is in A105/F6, other materials are available upon request.

Materials

body-cover	forged steel A105, P250GH
spring	stainless steel A182 F6
sealing seat facing	A 182 F6
cover gasket	spiral wound AISI 304

Dimensions

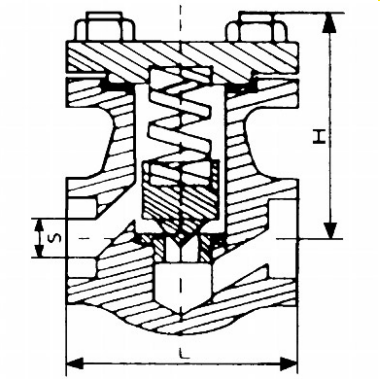

DN	S mm.	L mm.	H mm.	Weight kg.
1/4"	9	60	135	1
3/8"	9	60	135	1.5
1/2"	14	70	160	1.5
3/4"	18	92	180	2
1"	22	110	195	3
1"1/4	31	127	230	6
1"1/2	35	130	230	7.5
2"	43	159	235	10.5

Pressure

Pressure related to temperature

°F	°C	PSI	kg/cm2
100	38	2000	141
200	93	1940	136
300	149	1895	133
400	204	1850	130
500	260	1735	122
600	316	1540	108

Valvotubi ind. S.r.l. ®
Via M.Monti 30/b
48123 Ravenna, Italy

ph +39 0544 452279
fax +39 0544 451148

info@valvotubi.it
www.valvotubi.it