Cast steel “Y” strainer flanged RF ANSI class # 150



Art. 1801

Design & construction: API 600, API 6D
Face to face length: ASME / ANSI B16.10
Connections & dimensions: ASME / ANSI B16.5, ASME / ANSI B 16.25
Flanges: RF ANSI #150
Pressure & temperature: ASME / ANSI B16.34
Test: API 598

- Fig. 1801A: body st.st. CF8M, screen 316

The “Y” strainers are suitable to retain and collect any impurity from the pipeline. The cast steel “Y” strainers are manufactured in cast steel A216WCB according to API, ANSI, ASME standard, for industrial applications. The basket screen made in stainless steel 304 or 316 is removable for its cleaning.

Materials

body-cover	cast steel A216WCB, GP240GH+N
screen	stainless steel AISI 304
gasket	graphite
drain plug	forged steel A105
bolts	A 193 GR. B7
nuts	A 194 GR 2H
painting	high chlorinated polyethylene HCPE

Dimensions

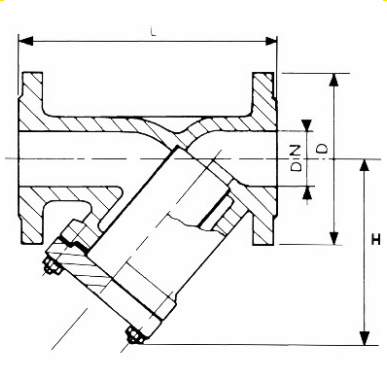

DN	L mm.	H mm.	D mm.	Weight kg.
2"	203	200	152	12
3"	241	260	190	28
4"	292	320	229	40
6"	406	370	279	87
8"	495	480	343	150
10"	622	590	406	220
12"	698	720	483	260

Pressure

Hydrostatic test				Pneumatic test	
shell		seat			
bars	psig	bars	psig	bars	psig
30	435	23	335	≥5,6	≥80

Valvotubi ind. S.r.l. ®
Via M.Monti 30/b
48123 Ravenna, Italy

ph +39 0544 452279
fax +39 0544 451148

info@valvotubi.it
www.valvotubi.it