WEY KNIFE GATE VALVE W1
HYDRAULIC CYLINDER OPERATED
Data sheet

Size 2"-36"
Standard Configuration

– Design: Full Flange Body
– Materials: Solid Cast Body
Hardened 17.4 pH Gate
– Solid Steel Heavy Duty Bonnet Topworks
– Flange Drilling: ANSI 150
– Face-to-Face: MSS-SP135
– Pressure Rating: Size 2”-24” 150 psi Shut-off
Size 30”-36” 90 psi Shut-off
Higher Pressure Ratings Available
– Suitable for Dead-end Service
– Optional Cylinder Sizes Available

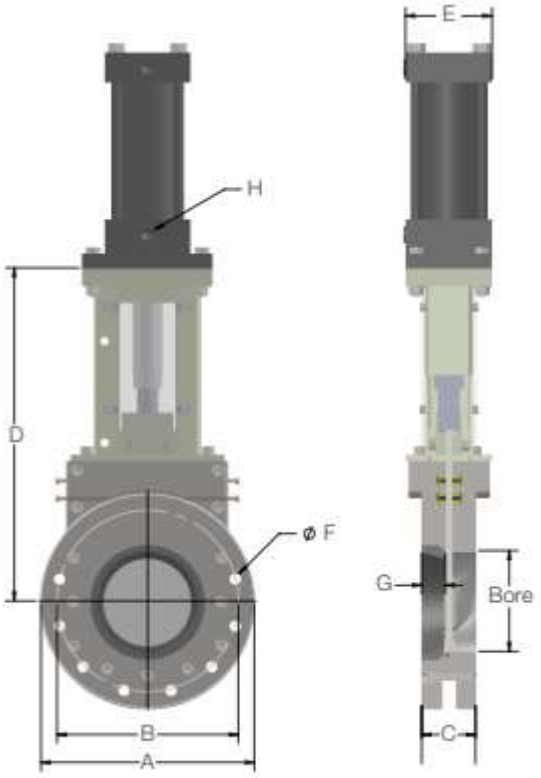

Bore	A	B	C	D	E	F	G	H	Bolts	⌖	Op. Pressure	Weight
2"	6.00	4.75	2.75	9.27	4"	5/8" – 11	-	-	4 pieces	-	150 psi	-
3"	7.50	6.00	4.00	10.62	4"	5/8" – 11	-	-	4 pieces	-	150 psi	-
4"	9.00	7.50	4.12	12.79	4"	5/8" – 11	0.86	-	8 pieces	2	150 psi	-
6"	11.00	9.50	2.50	16.83	6"	3/4" – 10	0.94	-	8 pieces	2	150 psi	-
8"	13.50	11.75	2.88	21.85	8"	3/4" – 10	1.12	-	8 pieces	2	150 psi	-
10"	16.00	14.25	3.12	24.30	10"	7/8" – 9	0.75	-	12 pieces	4	150 psi	-
12"	19.00	17.00	3.25	29.06	12"	7/8" – 9	0.83	-	12 pieces	4	150 psi	-
14"	21.00	18.50	3.62	32.05	12"	1 – 8"	0.78	-	12 pieces	4	150 psi	-
16"	23.50	21.25	3.75	37.21	14"	1 – 8"	0.94	-	12 pieces	4	150 psi	-
18"	25.00	22.75	4.12	40.78	14"	1 – 1/8" – 8	0.98	-	16 pieces	6	150 psi	-
20"	27.50	25.00	4.50	44.61	16"	1 – 1/8" – 8	1.37	-	20 pieces	6	150 psi	-
24"	32.00	29.50	5.00	51.70	18"	1 – 1/4" – 8	1.22	-	20 pieces	6	150 psi	-
30"	38.75	36.00	8.25	65.13	20"	1 – 1/4" – 8	0.98	-	28 pieces	10	90 psi	-
36"	46.00	42.75	9.84	78.78	24"	1 – 1/2" – 8	1.77	-	32 pieces	10	90 psi	-

** W0 model size 2” available as per TAPPI and MSS-SP81 face-to-face standard (1.88”)*
E = Consult the Factory for Custom Cylinder. Sizing to fit your Specific Application.
F = Bolt Diameter & Thread Pitch per MSS-SP135
H = Cylinder Ports SAE
⌖ *= Number of Blind Tapped Holes in Chest*

All information for reference only.
Modifications reserved.

A SISTAG BRAND